EN	Cordless Hedge Trimmer	INSTRUCTION MANUAL	8
SL	Brezžični rezalnik za živo mejo	NAVODILA ZA UPORABO	17
SQ	Prerës shkurresh me bateri	MANUALI I PËRDORIMIT	26
BG	Акумулаторен храсторез	РЪКОВОДСТВО ЗА ЕКСПЛОАТАЦИЯ	35
HR	Bežični trimer za živicu	PRIRUČNIK S UPUTAMA	45
MK	Безжична фреза за жива ограда	УПАТСТВО ЗА УПОТРЕБА	54
SR	Бежични тример за живу ограду	УПУТСТВО ЗА УПОТРЕБУ	64
RO	Maşină de tuns gardul viu fără cablu	MANUAL DE INSTRUCŢIUNI	73
UK	Акумуляторна пила для підрізання живоплоту	ІНСТРУКЦІЯ З ЕКСПЛУАТАЦІЇ	82
RU	Аккумуляторный Кусторез	РУКОВОДСТВО ПО ЭКСПЛУАТАЦИИ	92

DUH604S
DUH754S

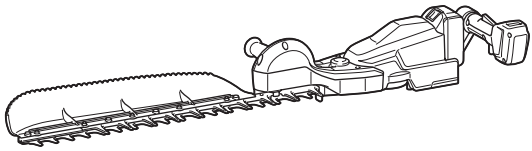

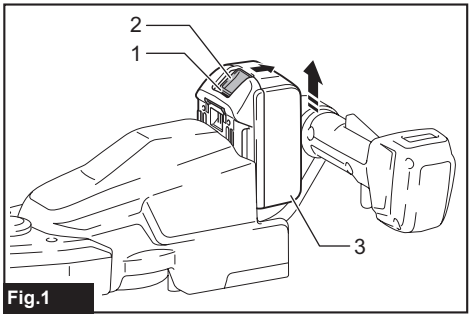

Fig.1

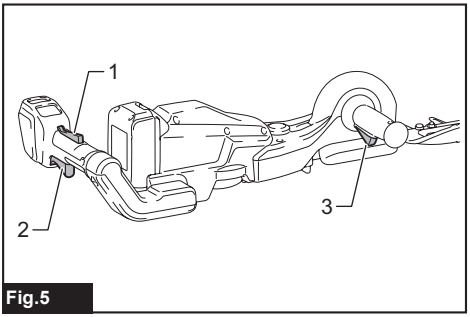

Fig.5

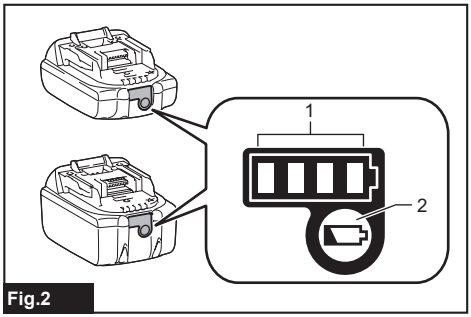

Fig.2

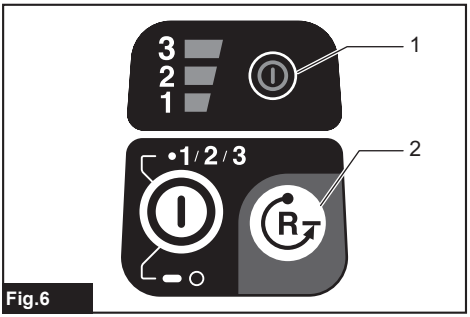

Fig.6

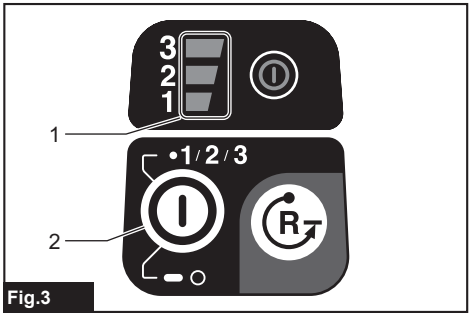

Fig.3

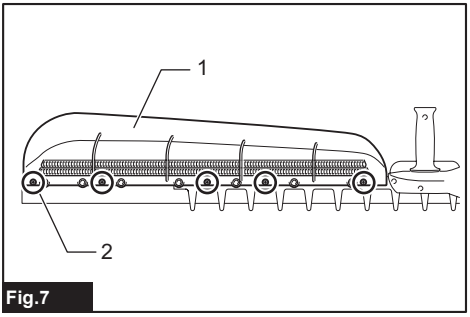

Fig.7

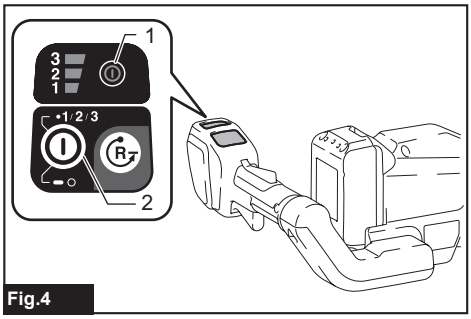

Fig.4

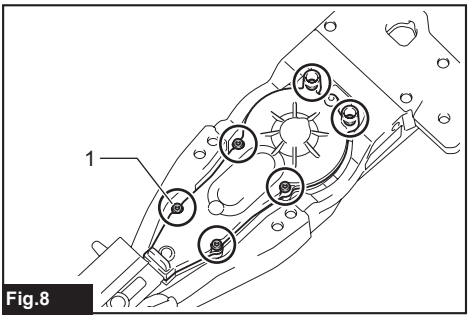

Fig.8

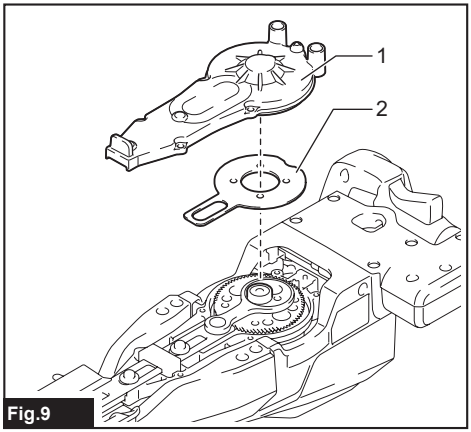

Fig.9

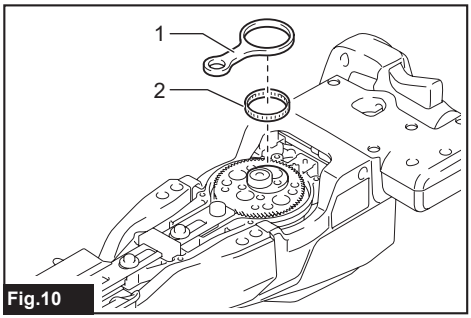

Fig.10

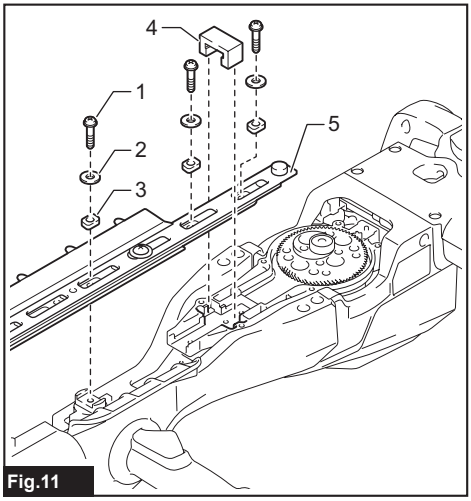

Fig.11

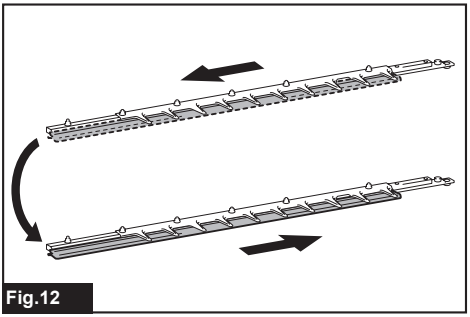
Fig.12

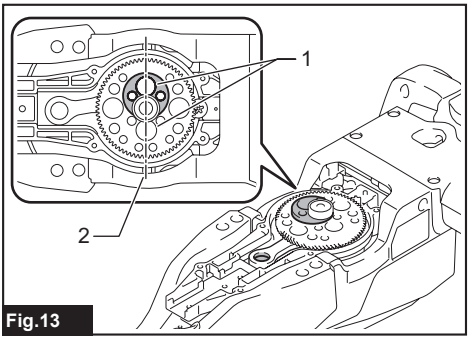

Fig.13

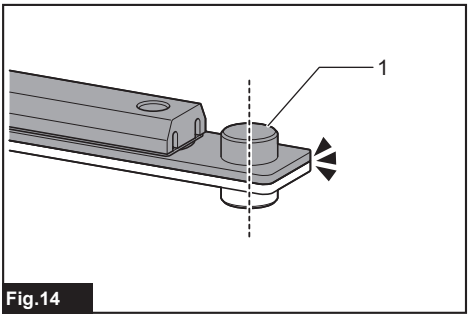

Fig.14

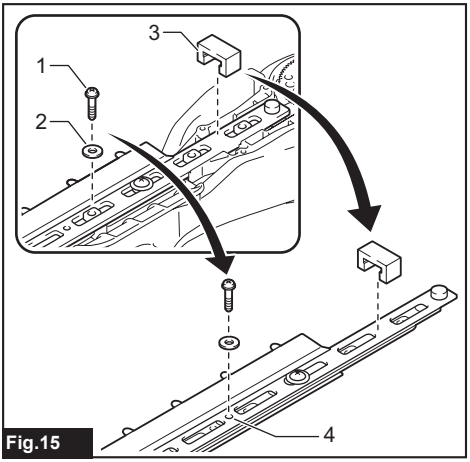

Fig.15

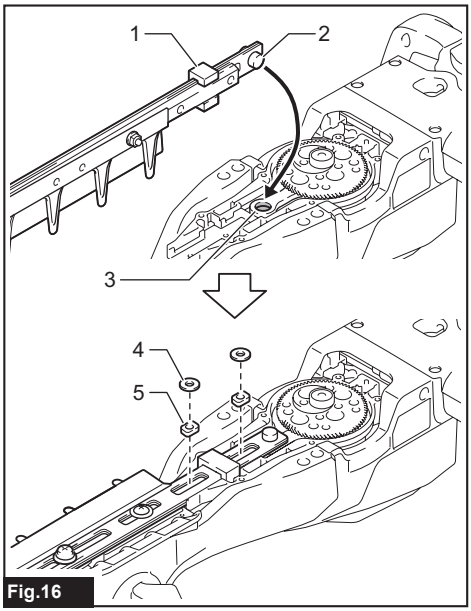

Fig.16

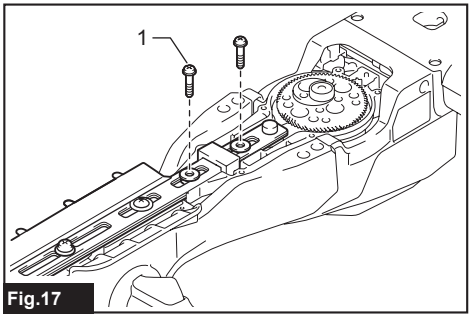

Fig.17

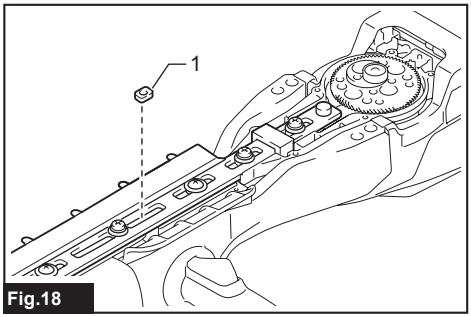

Fig.18

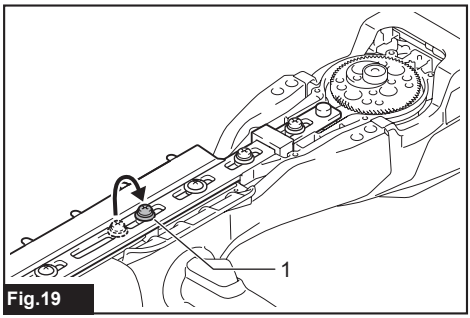

Fig.19

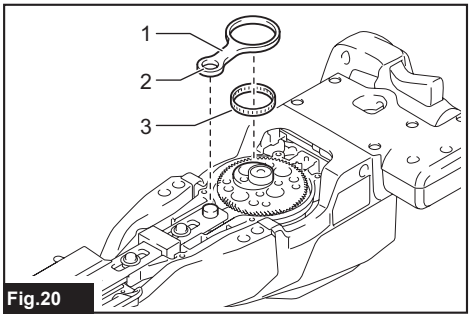

Fig.20

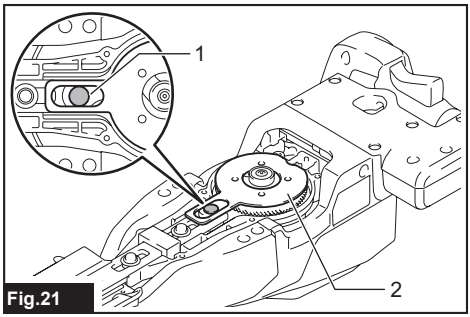

Fig.21

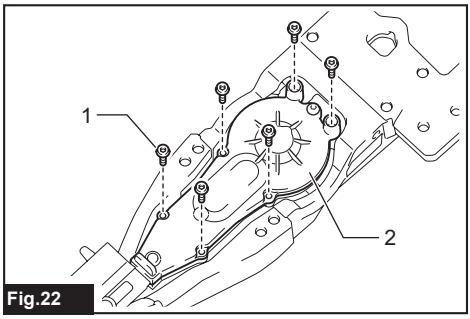

Fig.22

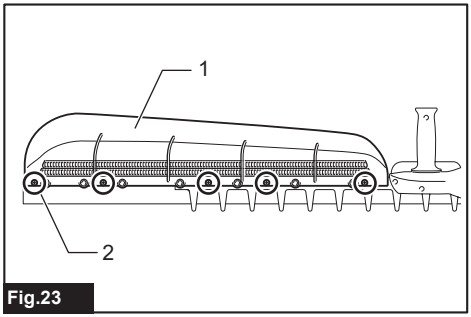

Fig.23

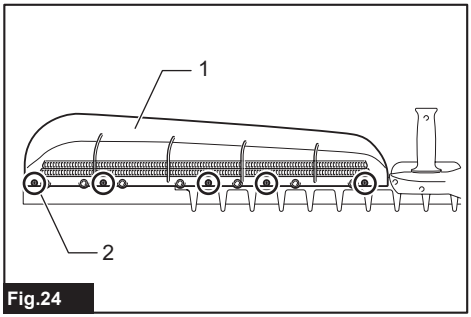

Fig.24

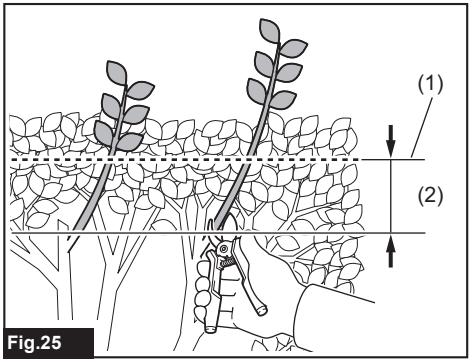

Fig.25

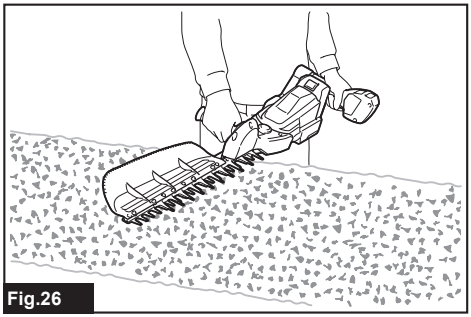
Fig.26

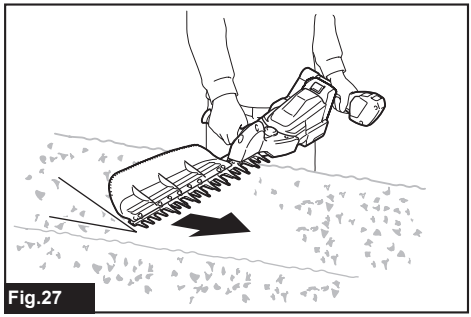
Fig.27

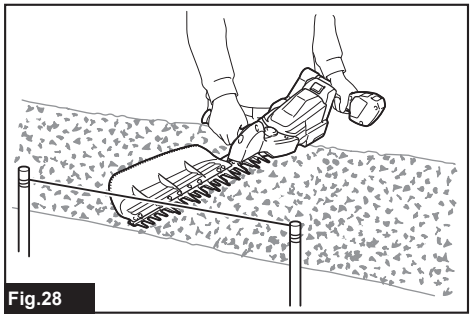
Fig.28

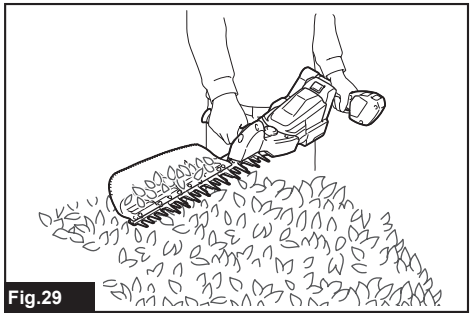
Fig.29

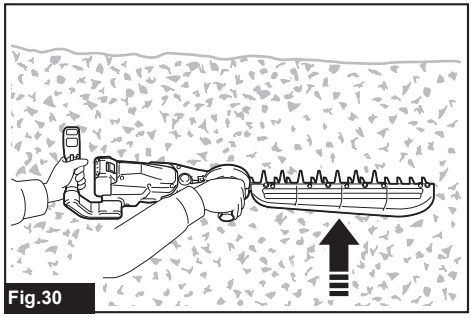
Fig.30

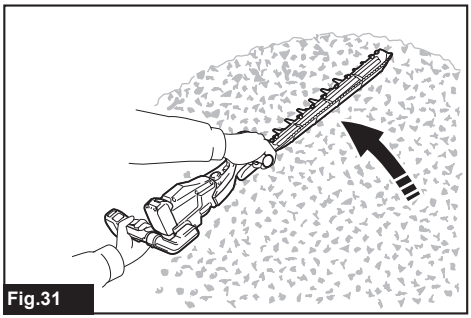
Fig.31

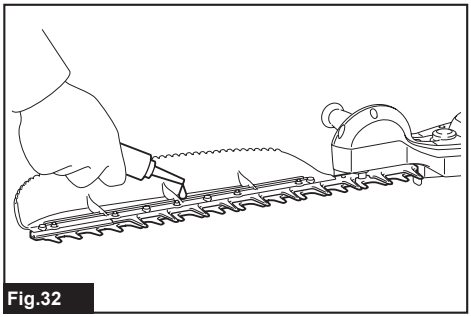
Fig.32

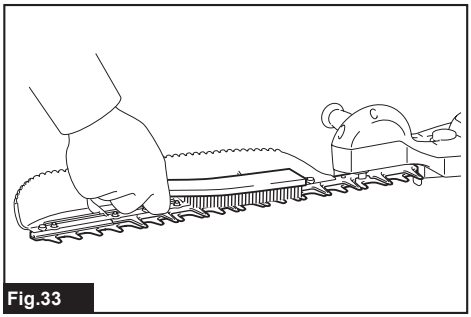
Fig.33

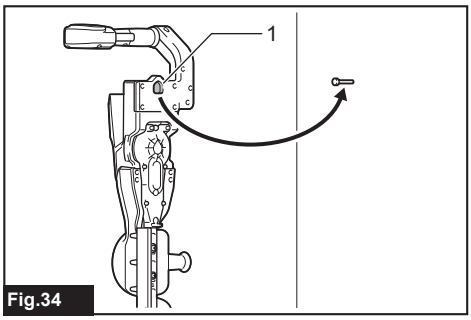

Fig.34

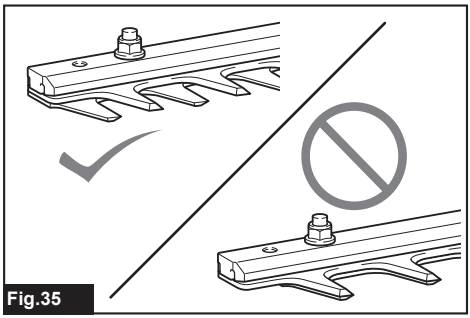
Fig.35

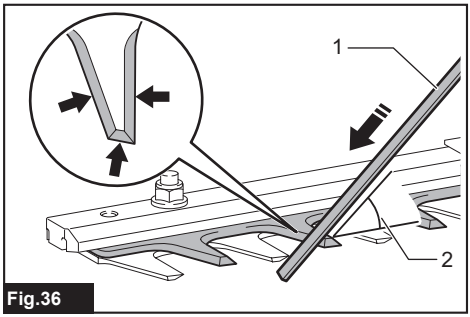

Fig.36

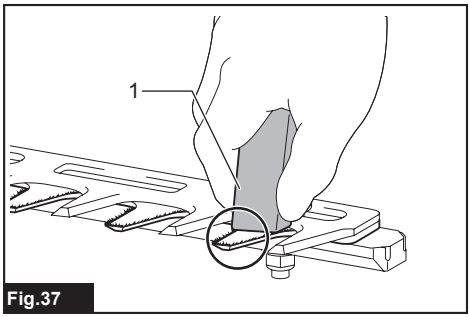

Fig.37

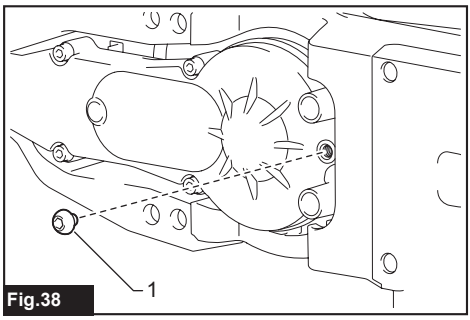

Fig.38

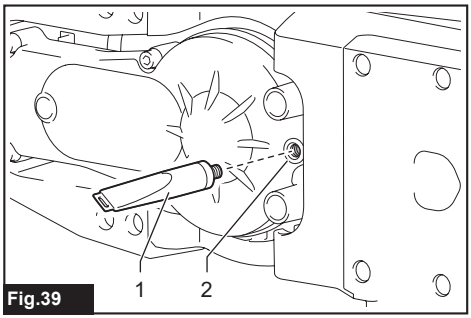

Fig.39

SPECIFICATIONS

Model:	DUH604S	DUH754S
Blade length	600 mm	750 mm
Strokes per minute	2,000 / 3,600 / 4,400 min^{-1}	
Overall length	1,061 mm	1,200 mm
Rated voltage	D.C. 18 V	
Net weight	3.4 - 3.9 kg	

- Due to our continuing program of research and development, the specifications herein are subject to change without notice.
- Specifications may differ from country to country.
- The weight may differ depending on the attachment(s), including the battery cartridge. The lightest and heaviest combination, according to EPTA-Procedure 01/2014, are shown in the table.

Applicable battery cartridge and charger

Battery cartridge	BL1815N / BL1820 / BL1820B / BL1830 / BL1830B / BL1840 / BL1840B / BL1850 / BL1850B / BL1860B
Charger	DC18RC / DC18RD / DC18RE / DC18SD / DC18SE / DC18SF / DC18SH

- Some of the battery cartridges and chargers listed above may not be available depending on your region of residence.

⚠***WARNING:*** **Only use the battery cartridges and chargers listed above.** Use of any other battery cartridges and chargers may cause injury and/or fire.

Recommended battery adapter

Battery adapter	PDC01

- The battery adapter(s) listed above may not be available depending on your region of residence.
- Before using the battery adapter, read instruction and cautionary markings on the battery adapter.

Symbols

The followings show the symbols used for the equipment. Be sure that you understand their meaning before use.

	Read instruction manual.
	Do not expose to moisture.
	Beware of pinching.
	Wear safety glasses.

 Ni-MH Li-ion	Only for EU countries Do not dispose of electric equipment or battery pack together with household waste material! In observance of the European Directives, on Waste Electric and Electronic Equipment and Batteries and Accumulators and Waste Batteries and Accumulators and their implementation in accordance with national laws, electric equipment and batteries and battery pack(s) that have reached the end of their life must be collected separately and returned to an environmentally compatible recycling facility.

Intended use

The tool is intended for trimming hedges.

Noise

The typical A-weighted noise level determined according to EN62841-4-2:

Model DUH604S
Sound pressure level (L_{pA}) : 79.3 dB(A)
Sound power level (L_{WA}) : 90.3 dB (A)
Uncertainty (K) : 3 dB(A)

Model DUH754S
Sound pressure level (L_{pA}) : 80.6 dB(A)
Sound power level (L_{WA}) : 91.6 dB (A)
Uncertainty (K) : 3 dB(A)

The noise level under working may exceed 80 dB (A).

NOTE: The declared noise emission value(s) has been measured in accordance with a standard test method and may be used for comparing one tool with another.

NOTE: The declared noise emission value(s) may also be used in a preliminary assessment of exposure.

⚠***WARNING:*** **Wear ear protection.**

⚠***WARNING:*** **The noise emission during actual use of the power tool can differ from the declared value(s) depending on the ways in which the tool is used especially what kind of workpiece is processed.**

⚠***WARNING:*** **Be sure to identify safety measures to protect the operator that are based on an estimation of exposure in the actual conditions of use (taking account of all parts of the operating cycle such as the times when the tool is switched off and when it is running idle in addition to the trigger time).**

Vibration

The vibration total value (tri-axial vector sum) determined according to EN62841-4-2:

Model DUH604S
Vibration emission (a_h) : 2.5 m/s^2 or less
Uncertainty (K) : 1.5 m/s^2

Model DUH754S
Vibration emission (a_h) : 2.5 m/s^2 or less
Uncertainty (K) : 1.5 m/s^2

NOTE: The declared vibration total value(s) has been measured in accordance with a standard test method and may be used for comparing one tool with another.

NOTE: The declared vibration total value(s) may also be used in a preliminary assessment of exposure.

⚠***WARNING:*** **The vibration emission during actual use of the power tool can differ from the declared value(s) depending on the ways in which the tool is used especially what kind of workpiece is processed.**

⚠***WARNING:*** **Be sure to identify safety measures to protect the operator that are based on an estimation of exposure in the actual conditions of use (taking account of all parts of the operating cycle such as the times when the tool is switched off and when it is running idle in addition to the trigger time).**

EC Declaration of Conformity

For European countries only

The EC declaration of conformity is included as Annex A to this instruction manual.

SAFETY WARNINGS

General power tool safety warnings

⚠***WARNING:*** **Read all safety warnings, instructions, illustrations and specifications provided with this power tool.** Failure to follow all instructions listed below may result in electric shock, fire and/or serious injury.

Save all warnings and instructions for future reference.

The term "power tool" in the warnings refers to your mains-operated (corded) power tool or battery-operated (cordless) power tool.

Cordless Hedge Trimmer Safety Warnings

1. **Keep all parts of the body away from the blade. Do not remove cut material or hold material to be cut when blades are moving.** Blades continue to move after the switch is turned off. A moment of inattention while operating the hedge trimmer may result in serious personal injury.
2. **Carry the hedge trimmer by the handle with the blade stopped and taking care not to operate any power switch.** Proper carrying of the hedge trimmer will decrease the risk of inadvertent starting and resultant personal injury from the blades.
3. **When transporting or storing the hedge trimmer, always fit the blade cover.** Proper handling of the hedge trimmer will decrease the risk of personal injury from the blades.
4. **When clearing jammed material or servicing the unit, make sure all power switches are off and the battery pack is removed or disconnected.** Unexpected actuation of the hedge trimmer while clearing jammed material or servicing may result in serious personal injury.
5. **Hold the hedge trimmer by insulated gripping surfaces only, because the blade may contact hidden wiring.** Blades contacting a "live" wire may make exposed metal parts of the hedge trimmer "live" and could give the operator an electric shock.
6. **Keep all power cords and cables away from cutting area.** Power cords or cables may be hidden in hedges or bushes and can be accidentally cut by the blade.
7. **Do not use the hedge trimmer in bad weather conditions, especially when there is a risk of lightning.** This decreases the risk of being struck by lightning.

Additional Safety Instructions

Preparation

1. **Check the hedges and bushes for foreign objects, such as wire fences or hidden wiring before operating the tool.**
2. **The tool must not be used by children or young persons under 18 years of age.** Young persons over 16 years of age may be exempted from this restriction if they are undergoing training under the supervision of an expert.

3. **First-time users should have an experienced user show them how to use the tool.**
4. **Use the tool only if you are in good physical condition.** If you are tired, your attention will be reduced. Be especially careful at the end of a working day. Perform all work calmly and carefully. The user is responsible for all damages to third parties.
5. **Never use the tool when under the influence of alcohol, drugs or medication.**
6. **Work gloves of stout leather are part of the basic equipment of the tool and must always be worn when working with it. Also wear sturdy shoes with anti-skid soles.**
7. **Before starting work check to make sure that the tool is in good and safe working order. Ensure guards are fitted properly. The tool must not be used unless fully assembled.**

Operation

1. **Hold the tool firmly with both hands when using the tool.**
2. **The tool is intended to be used by the operator at ground level. Do not use the tool on ladders or any other unstable support.**
3. **Do not simultaneously wear multiple belt harnesses and/or shoulder harnesses when operating the tool.**
4. **DANGER - Keep hands away from blade.** Contact with blade will result in serious personal injury.
5. **Do not use the tool in the rain or in wet or very damp conditions.** The electric motor is not waterproof.
6. **Make sure you have a secure footing before starting operation.**
7. **Do not operate the tool at no-load unnecessarily.**
8. **Immediately switch off the tool and remove the battery cartridge if the shear blades should come into contact with a fence or other hard object. Check the blades for damage, and if damaged, replace the blades immediately.**
9. **Before checking the shear blades, taking care of faults, or removing material caught in the shear blades, always switch off the tool and remove the battery cartridge.**
10. **Never point the shear blades to yourself or others.**
11. **If the blades stop moving due to the stuck of foreign objects between the blades during operation, switch off the tool and remove the battery cartridge, and then remove the foreign objects using tools such as pliers.** Removing the foreign objects by hand may cause an injury for the reason that the blades may move in reaction to removing the foreign objects.
12. **Avoid dangerous environment. Don't use the tool in damp or wet locations or expose it to rain. Water entering the tool will increase the risk of electric shock.**

Maintenance and storage

1. **Switch off the tool and remove the battery cartridge before doing any maintenance work.**
2. **When moving the tool to another location, including during work, always remove the battery cartridge and put the blade cover on the shear blades. Never carry or transport the tool with the blades running. Never grasp the blades with your hands.**
3. **Clean the tool and especially the shear blades after use, and before putting the tool into storage for extended periods. Lightly oil the blades and put on the blade cover.**
4. **Store the tool with the blade cover on, in a dry room. Keep it out of reach of children. Never store the tool outdoors.**
5. **Do not dispose of the battery(ies) in a fire. The cell may explode. Check with local codes for possible special disposal instructions.**
6. **Do not open or mutilate the battery(ies). Released electrolyte is corrosive and may cause damage to the eyes or skin. It may be toxic if swallowed.**
7. **Do not charge battery in rain, or in wet locations.**

SAVE THESE INSTRUCTIONS.

⚠*WARNING:* DO NOT let comfort or familiarity with product (gained from repeated use) replace strict adherence to safety rules for the subject product. MISUSE or failure to follow the safety rules stated in this instruction manual may cause serious personal injury.

Important safety instructions for battery cartridge

1. **Before using battery cartridge, read all instructions and cautionary markings on (1) battery charger, (2) battery, and (3) product using battery.**
2. **Do not disassemble battery cartridge.**
3. **If operating time has become excessively shorter, stop operating immediately. It may result in a risk of overheating, possible burns and even an explosion.**
4. **If electrolyte gets into your eyes, rinse them out with clear water and seek medical attention right away. It may result in loss of your eyesight.**
5. **Do not short the battery cartridge:**
   (1) **Do not touch the terminals with any conductive material.**
   (2) **Avoid storing battery cartridge in a container with other metal objects such as nails, coins, etc.**
   (3) **Do not expose battery cartridge to water or rain.**

   A battery short can cause a large current flow, overheating, possible burns and even a breakdown.

6. **Do not store the tool and battery cartridge in locations where the temperature may reach or exceed 50 °C (122 °F).**
7. **Do not incinerate the battery cartridge even if it is severely damaged or is completely worn out. The battery cartridge can explode in a fire.**
8. **Be careful not to drop or strike battery.**
9. **Do not use a damaged battery.**
10. **The contained lithium-ion batteries are subject to the Dangerous Goods Legislation requirements.**
    For commercial transports e.g. by third parties, forwarding agents, special requirement on packaging and labeling must be observed.
    For preparation of the item being shipped, consulting an expert for hazardous material is required.
    Please also observe possibly more detailed national regulations.
    Tape or mask off open contacts and pack up the battery in such a manner that it cannot move around in the packaging.
11. **When disposing the battery cartridge, remove it from the tool and dispose of it in a safe place. Follow your local regulations relating to disposal of battery.**
12. **Use the batteries only with the products specified by Makita.** Installing the batteries to non-compliant products may result in a fire, excessive heat, explosion, or leak of electrolyte.
13. **If the tool is not used for a long period of time, the battery must be removed from the tool.**

SAVE THESE INSTRUCTIONS.

⚠*CAUTION:* Only use genuine Makita batteries. Use of non-genuine Makita batteries, or batteries that have been altered, may result in the battery bursting causing fires, personal injury and damage. It will also void the Makita warranty for the Makita tool and charger.

Tips for maintaining maximum battery life

1. **Charge the battery cartridge before completely discharged. Always stop tool operation and charge the battery cartridge when you notice less tool power.**
2. **Never recharge a fully charged battery cartridge. Overcharging shortens the battery service life.**
3. **Charge the battery cartridge with room temperature at 10 °C - 40 °C (50 °F - 104 °F). Let a hot battery cartridge cool down before charging it.**
4. **Charge the battery cartridge if you do not use it for a long period (more than six months).**

FUNCTIONAL DESCRIPTION

⚠*CAUTION:* Always be sure that the tool is switched off and the battery cartridge is removed before adjusting or checking function on the tool.

Installing or removing battery cartridge

⚠*CAUTION:* Always switch off the tool before installing or removing of the battery cartridge.

⚠*CAUTION:* Hold the tool and the battery cartridge firmly when installing or removing battery cartridge. Failure to hold the tool and the battery cartridge firmly may cause them to slip off your hands and result in damage to the tool and battery cartridge and a personal injury.

► **Fig.1:** **1.** Red indicator **2.** Button **3.** Battery cartridge

To remove the battery cartridge, slide it from the tool while sliding the button on the front of the cartridge.

To install the battery cartridge, align the tongue on the battery cartridge with the groove in the housing and slip it into place. Insert it all the way until it locks in place with a little click. If you can see the red indicator on the upper side of the button, it is not locked completely.

⚠*CAUTION:* Always install the battery cartridge fully until the red indicator cannot be seen. If not, it may accidentally fall out of the tool, causing injury to you or someone around you.

⚠*CAUTION:* Do not install the battery cartridge forcibly. If the cartridge does not slide in easily, it is not being inserted correctly.

Indicating the remaining battery capacity

Only for battery cartridges with the indicator

► **Fig.2:** **1.** Indicator lamps **2.** Check button

Press the check button on the battery cartridge to indicate the remaining battery capacity. The indicator lamps light up for a few seconds.

Indicator lamps			Remaining capacity
Lighted	Off	Blinking	
■	■ ■ ■		75% to 100%
■	■ ■ □		50% to 75%
■	■ □ □		25% to 50%
■	□ □ □		0% to 25%
	□ □ □	◪	Charge the battery.
■	■ □ □		The battery may have malfunctioned.
	↑ ↓		
	□ ■ ■		

NOTE: Depending on the conditions of use and the ambient temperature, the indication may differ slightly from the actual capacity.

Speed adjusting

You can adjust the tool speed by pressing the main power button. Each time you press the main power button, the level of speed changes.
► **Fig.3: 1.** Speed indicator **2.** Main power button

Indicator	Mode	Stroke speed
3 ■ 2 ■ 1 ■	High	4,400 min^{-1}
3 □ 2 ■ 1 ■	Medium	3,600 min^{-1}
3 □ 2 □ 1 ■	Low	2,000 min^{-1}

Tool / battery protection system

The tool is equipped with a tool/battery protection system. This system automatically cuts off power to the motor to extend tool and battery life. The tool will automatically stop during operation if the tool or battery is placed under one of the following conditions:

Status	Indicator lamps		
	■ On	□ Off	▨ Blinking
Overload	3 ▨ 2 ▨ 1 □		
Overheat	3 ▨ 2 ▨ 1 ▨	3 □ 2 □ 1 ▨	
Over discharge	3 □ 2 □ 1 ▨		

Overload protection

If the tool is overloaded by entangled branches or other debris, the indicators for "2" and "3" start blinking and the tool automatically stops.
In this situation, turn the tool off and stop the application that caused the tool to become overloaded. Then turn the tool on to restart.

NOTICE: **Depending on the usage conditions, the tool is automatically turned off without any indication if the tool is overloaded by entangled branches or debris. In this case, switch off the tool and remove the battery cartridge, and then remove entangled branches or debris using tools such as pliers. After removing the branches or debris, install the battery cartridge and turn on the tool again.**

Overheat protection for tool or battery

There are two types of overheating; tool overheating and battery overheating. When the tool overheating occurs, all speed indicators blink. When the battery overheating occurs, indicator for "1" blinks.
If the overheating occurs, the tool stops automatically. Let the tool and/or battery cool down before turning the tool on again.

Overdischarge protection

When the battery capacity becomes low, the tool stops automatically and indicator for "1" blinks.
If the tool does not operate even when the switches are operated, remove the battery from the tool and charge the battery.

Power switch action

⚠***WARNING:*** **For your safety, this tool is equipped with lever which prevents the tool from unintended starting. NEVER use the tool if it runs when you simply pull the switch triggers without pressing the lever. Return the tool to our authorized service center for proper repairs BEFORE further usage.**

⚠***WARNING:*** **NEVER tape down or defeat purpose and function of the lever.**

⚠***WARNING:*** **Before installing the battery cartridge on the tool, always check to see that the switch triggers and lever actuate properly and return to the "OFF" position when released.** Operating a tool with a switch that does not actuate properly can lead to loss of control and serious personal injury.

⚠***CAUTION:*** **Never put your finger on the switch triggers when carrying.** The tool may start unintentionally and cause injury.

NOTICE: **Do not pull the switch trigger hard without pressing the lever. This can cause switch breakage.**

Press the main power button to turn on the tool. The power lamp lights up when the tool is turned on. To turn off the tool, press and hold the main power button. The power lamp goes off when the tool is turned off.
► **Fig.4: 1.** Power lamp **2.** Main power button

NOTE: The tool is automatically turned off if the tool is not operated for a certain period.

To prevent the switch trigger from being accidentally pulled, the lever is provided. To start the tool, pull the front switch trigger, and then pull the rear switch trigger while pressing the lever. When you release either of the switch triggers, the tool stops.
► **Fig.5: 1.** Lever **2.** Rear switch trigger **3.** Front switch trigger

Reverse button for debris removal

⚠*WARNING:* If the entangled branches or debris cannot be removed by the reverse function, switch off the tool and remove the battery cartridge, and then remove the entangled branches or debris using tools such as pliers. Failure to switch off the tool and remove the battery cartridge may result in serious personal injury from accidental start-up. Removing the entangled branches or debris by hand may cause an injury, since the shear blades may move in reaction to removing them.

This tool has a reverse button to change the direction of shear blades movement. It is only for removing branches and debris entangled in the tool.
To reverse the shear blades movement, press the reverse button when the shear blades have stopped, then pull the front switch trigger, and then pull the rear switch trigger while pressing the lever. The power lamp starts blinking, and the shear blades move in reverse direction.
When entangled branches and debris are removed, the tool returns to the regular movement and the power lamp stops blinking and lights up.
► **Fig.6:** **1.** Power lamp **2.** Reverse button

NOTE: If the entangled branches or debris cannot be removed, release the switch triggers, then press the reverse button, and then pull the switch triggers until they are removed.

NOTE: If you tap the reverse button while the shear blades are still moving, the tool comes to stop and to be ready for reverse movement.

ASSEMBLY

⚠*CAUTION:* Always be sure that the tool is switched off and the battery cartridge is removed before carrying out any work on the tool.

⚠*CAUTION:* When replacing the shear blades, always wear gloves so that your hands do not directly contact the blades.

***NOTICE:* When replacing the shear blades, do not wipe off grease from the gear and crank.**

Installing or removing the shear blades

⚠*CAUTION:* Attach the blade cover before removing or installing the shear blades.

You can install 600 mm or 750 mm shear blades to your tool.

NOTE: If you change the shear blades to a different length, replace the chip receiver with one which fits the blades.

1. Remove 4 screws (for DUH604S) or 5 screws (for DUH754S), and then remove the chip receiver from the tool.
► **Fig.7:** **1.** Chip receiver **2.** Screw

2. Place the tool upside down, and then remove 6 bolts.
► **Fig.8:** **1.** Bolt

3. Remove the cover and the plate.
► **Fig.9:** **1.** Cover **2.** Plate

NOTE: The plate may remain on the cover.

4. Remove the rod and the bearing.
► **Fig.10:** **1.** Rod **2.** Bearing

NOTE: The rod or bearing may remain on the cover.

5. Remove 3 screws, 3 washers, 3 sleeves and the felt pad, and then remove the shear blades.
► **Fig.11:** **1.** Screw **2.** Washer **3.** Sleeve **4.** Felt pad **5.** Shear blades

***NOTICE:* Be careful not to lose the screws and washers.**

6. Remove the blade cover, and then attach it to the new shear blades.
► **Fig.12**

7. Adjust the crank so that 2 holes are lined up on the alignment line.
► **Fig.13:** **1.** Hole **2.** Alignment line

8. Align the protrusions on the shear blades vertically at the same position.
► **Fig.14:** **1.** Protrusion

9. Insert the screw and the washer removed in step 5 into the hole on the shear blades to temporarily fix the shear blades, and then attach the felt pad to the shear blades.
► **Fig.15:** **1.** Screw **2.** Washer **3.** Felt pad **4.** Hole

10. Insert the protrusion on the shear blades to the hole on the rod, then align the position of the felt pad with the holes on the tool. Attach 2 new sleeves and 2 washers.
► **Fig.16:** **1.** Felt pad **2.** Protrusion **3.** Hole **4.** Washer **5.** Sleeve

***NOTICE:* Apply a small amount of grease to the inner periphery of the hole of the rod.**

***NOTICE:* Be careful not to lose the washers and the sleeves.**

11. Align the holes on the washers, sleeves, and shear blades with the holes on the tool, and then tighten 2 screws to temporarily fix the shear blades.
► **Fig.17:** **1.** Screw

12. Attach a new sleeve.
► **Fig.18:** **1.** Sleeve

13. Remove the screw and the washer inserted into the hole on the shear blades in step 9, and then tighten the screw together with the sleeve and the washer to fix the shear blades.
► **Fig.19:** **1.** Screw and washer

14. Firmly tighten the screws which were temporarily fixed in step 11.

15. Attach the bearing and the rod.
► **Fig.20:** **1.** Rod **2.** Small hole **3.** Bearing

NOTICE: **Apply a small amount of grease to the inner periphery of the small hole of the rod.**

NOTICE: **Make sure that the protrusion on the shear blades fits in the small hole on the rod.**

16. Attach the plate.
► **Fig.21: 1.** Protrusion **2.** Plate

NOTICE: **Make sure that the protrusion on the shear blades fits in the hole on the plate.**

17. Attach the cover, and then tighten 6 bolts.
► **Fig.22: 1.** Bolt **2.** Cover

18. Attach the chip receiver to the tool by tightening 4 screws (for DUH604S) or 5 screws (for DUH754S).
► **Fig.23: 1.** Chip receiver **2.** Screw

NOTICE: **If the shear blades do not move smoothly, the shear blades are not engaged with the rods properly. Install the shear blades again.**

NOTICE: **If the parts other than the shear blades such as the rods are worn out, ask Makita Authorized Service Centers for parts replacement or repairs.**

Removing or installing the chip receiver

⚠***CAUTION:*** **When installing or removing the chip receiver, always wear gloves so that your hands do not directly contact the shear blades.**

The chip receiver gathers discarded leaves and makes clean-up afterward much easier.

To remove the chip receiver, remove 4 screws (for DUH604S) or 5 screws (for DUH754S), and then remove the chip receiver from the tool. To install the chip receiver, follow the removal procedure in reverse.
► **Fig.24: 1.** Chip receiver **2.** Screw

OPERATION

⚠***WARNING:*** **Keep hands away from shear blades.**

⚠***CAUTION:*** **Avoid operating the tool in very hot weather as much as practicable. When operating the tool, be careful of your physical condition.**

⚠***CAUTION:*** **Be careful not to accidentally contact a metal fence or other hard objects while trimming.** The shear blades may break and cause an injury.

⚠***CAUTION:*** **Be careful not to allow the shear blades to contact the ground.** The tool may recoil and cause an injury.

⚠***CAUTION:*** **Overreaching with a hedge trimmer, particularly from a ladder, is extremely dangerous.** Do not work while standing on anything wobbly or infirm.

NOTICE: **Do not attempt to cut branches thicker than 10 mm in diameter with the tool.** Cut branches to 10 cm lower than the cutting height using branch cutters before using the tool.

► **Fig.25: (1)** Cutting height **(2)** 10 cm

NOTICE: **Do not cut down dead trees or similar hard objects.** Doing so may damage the tool.

NOTICE: **Do not trim the grass or weeds while using the shear blades.** The shear blades may become tangled in the grass or weeds.

Hold the front grip with your right hand and the rear grip with your left hand. Pull the front switch trigger, then pull the rear switch trigger while pressing the lever, and then move the tool forward.
► **Fig.26**

For basic operation, tilt the shear blades toward the trimming direction and move it calmly and slowly at the speed rate of 3 to 4 seconds per meter.
► **Fig.27**

To cut a hedge top evenly, tie a string at the desired height and trim along it.
► **Fig.28**

The chip receiver gathers discarded leaves and makes clean-up afterward much easier.
► **Fig.29**

To cut a hedge side evenly, cut from the bottom to top.
► **Fig.30**

When trimming to make a round shape (trimming boxwood or rhododendron, etc.), trim from the root to the top for a beautiful finish.
► **Fig.31**

MAINTENANCE

⚠***CAUTION:*** **Always be sure that the tool is switched off and the battery cartridge is removed before attempting to perform inspection or maintenance.**

To maintain product SAFETY and RELIABILITY, repairs, any other maintenance or adjustment should be performed by Makita Authorized or Factory Service Centers, always using Makita replacement parts.

Cleaning the tool

Clean the tool by wiping off dust with a dry cloth or one dipped in soapy water and wrung out.

NOTICE: **Never use gasoline, benzine, thinner, alcohol or the like. Discoloration, deformation or cracks may result.**

Shear blade maintenance

Before the operation or once per hour during operation, apply low-viscosity oil (machine oil, or spray-type lubricating oil) to the shear blades.
► **Fig.32**

After operation, remove dust from the shear blades with a wired brush, wipe it off with a cloth and then apply low-viscosity oil (machine oil, or spray-type lubricating oil) to the shear blades.
► **Fig.33**

NOTICE: **Do not wash the shear blades in water.** Doing so may cause rust or damage to the tool.

NOTICE: **Dirt and corrosion cause excessive blade friction and shorten the operating time per battery charge.**

Storage

The hook hole in the tool bottom is convenient for hanging the tool from a nail or screw on the wall.
Remove the battery cartridge from the tool, and then attach the blade cover to the shear blades so that the blades are not exposed. Store the tool out of the reach of children. Store the tool in a place not exposed to moisture or rain.
► **Fig.34: 1.** Hole

Grinding the shear blades

NOTICE: **If the shear blades have considerably deformed by grinding, replace the shear blades with new ones.**

1. Install the battery cartridge to the tool.

2. Turn on and start the tool so that the upper blade and lower blade are positioned alternately.
► **Fig.35**

3. Turn off the tool and remove the battery cartridge from the tool.

4. Set the angle of a file to 45°, and grind the upper blade from 3 directions with the file.
► **Fig.36: (1)** File **(2)** 45°

⚠***CAUTION:*** **Before grinding the shear blades, make sure that the tool is switched off and the battery cartridge is removed from the tool.**

5. Place the tool upside down, and then remove the burrs from the shear blades with the file.
► **Fig.37: 1.** File

6. Set the angle of the file to 45°, and grind the lower blade from 3 directions with the file.

7. Return the tool to normal position, and then remove the burrs from the shear blades with the file.

Grease lubrication

Interval of lubrication: Every 100 operating hours

1. Remove the bolt from the hole for lubrication.
► **Fig.38: 1.** Bolt

2. Remove the cap from the grease vessel. Align the outlet of the grease vessel with the hole on the cover, and then press the outlet of the grease vessel onto the hole.
► **Fig.39: 1.** Grease vessel **2.** Hole

3. Apply the grease to the tool (Approximately 5 g as a guide).

4. Tighten the bolt.

TROUBLESHOOTING

Before asking for repairs, conduct your own inspection first. If you find a problem that is not explained in the manual, do not attempt to dismantle the tool. Instead, ask Makita Authorized Service Centers, always using Makita replacement parts for repairs.

State of abnormality	Probable cause (malfunction)	Remedy
Motor does not run.	Battery cartridge is not installed.	Install the battery cartridge.
	Battery problem (under voltage)	Recharge the battery. If recharging is not effective, replace battery.
	The drive system does not work correctly.	Ask your local authorized service center for repair.
Motor stops running after a little use.	Battery's charge level is low.	Recharge the battery. If recharging is not effective, replace battery.
	Overheating.	Stop using of tool to allow it to cool down.
Tool does not reach maximum RPM.	Battery is installed improperly.	Install the battery cartridge as described in this manual.
	Battery power is dropping.	Recharge the battery. If recharging is not effective, replace battery.
	The drive system does not work correctly.	Ask your local authorized service center for repair.
Shear blades do not move: ⇨ stop the machine immediately!	Foreign objects are caught between the shear blades.	1. Use the reverse button. 2. Switch off the tool and remove the battery cartridge, and then remove the foreign objects using tools such as pliers.
	The drive system does not work correctly.	Ask your local authorized service center for repair.
Abnormal vibration: ⇨ stop the machine immediately!	Shear blades are broken, bent or worn.	Replace the shear blades.
	The drive system does not work correctly.	Ask your local authorized service center for repair.
Shear blades and motor cannot stop: ⇨ Remove the battery immediately!	Electric malfunction.	Remove the battery and ask your local authorized service center for repair.

OPTIONAL ACCESSORIES

⚠***CAUTION:*** **These accessories or attachments are recommended for use with your Makita tool specified in this manual.** The use of any other accessories or attachments might present a risk of injury to persons. Only use accessory or attachment for its stated purpose.

If you need any assistance for more details regarding these accessories, ask your local Makita Service Center.

- Shear blade assembly
- Chip receiver
- Grease vessel
- Makita genuine battery and charger

NOTE: Some items in the list may be included in the tool package as standard accessories. They may differ from country to country.

TEHNIČNI PODATKI

Model:	DUH604S	DUH754S
Dolžina rezila	600 mm	750 mm
Hodi na minuto	2.000 / 3.600 / 4.400 min^{-1}	
Celotna dolžina	1.061 mm	1.200 mm
Nazivna napetost	D.C. 18 V	
Neto teža	3,4 – 3,9 kg	

- Ker nenehno opravljamo raziskave in razvijamo svoje izdelke, se lahko tehnični podatki v tem dokumentu spremenijo brez obvestila.
- Tehnični podatki se lahko razlikujejo od države do države.
- Teža se lahko razlikuje glede na priključke, vključno z akumulatorsko baterijo. Najlažja in najtežja kombinacija v skladu s postopkom EPTA 01/2014 sta prikazani v preglednici.

Uporabna akumulatorska baterija in polnilnik

Baterijski vložek	BL1815N / BL1820 / BL1820B / BL1830 / BL1830B / BL1840 / BL1840B / BL1850 / BL1850B / BL1860B
Polnilnik	DC18RC / DC18RD / DC18RE / DC18SD / DC18SE / DC18SF / DC18SH

- Nekatere zgoraj navedene akumulatorske baterije in polnilniki morda v vaši državi prebivališča niso na voljo.

⚠ ***OPOZORILO:*** **Uporabljajte le zgoraj navedene akumulatorske baterije in polnilnike.** Uporaba drugih akumulatorskih baterij in polnilnikov lahko povzroči telesne poškodbe in/ali požar.

Priporočeni adapter za baterije

Adapter za baterije	PDC01

- Nekateri zgoraj navedeni adapterji za baterije morda v vaši državi prebivališča niso na voljo.
- Pred uporabo adapterja za akumulator preberite navodila in varnostne oznake na adapterju za akumulator.

Simboli

Naslednji simboli se uporabljajo v povezavi s strojem. Pred uporabo izdelka se obvezno seznanite z njihovim pomenom.


Preberite navodila za uporabo.


Ne izpostavljajte vlagi.


Pazite na zagozdenje.


Nosite zaščitna očala.



Samo za države EU
Ne zavrzite izrabljene električne opreme ali akumulatorskega sklopa med gospodinjske odpadke!
V skladu z Evropskimi direktivami o odpadni električni in elektronski opremi, baterijah in akumulatorjih, odpadnih baterijah in akumulatorjih ter upoštevanjem njihovih določil v skladu z državno zakonodajo je treba električno opremo, baterije in akumulatorje, katerih življenjski cikel je pretekel, zbirati ločeno in jih dostaviti v ustrezen obrat za recikliranje, ki deluje skladno z okoljevarstvenimi zahtevami.

Predvidena uporaba

Orodje je namenjeno rezanju žive meje.

Hrup

Običajna A-ovrednotena raven hrupa v skladu z EN62841-4-2:

Model DUH604S
Raven zvočnega tlaka (L_{pA}): 79,3 dB (A)
Raven zvočne moči (L_{WA}): 90,3 dB (A)
Odstopanje (K): 3 dB (A)