LIGHTHOUSE®

USER MANUAL L/HSLPB5500 & L/HSLPB5500L
PROFESSIONAL LED SITE LIGHT

BEFORE USING FOR THE FIRST TIME

Please ensure you read and understand these instructions clearly before using this product for the first time. Failure to do so could result in personal injury or damage to this product or property. It is important you retain this user manual for future reference.

SAFETY PRECAUTIONS

- ► Do not use the work light in the immediate vicinity of inflammable materials or gases.
- ► Make sure that the light is not covered during use.
- ► Only use the accessories included with this product when charging the work light.
- ► Keep this work light out of reach of children and pets.
- ► Do not point the light directly in your own, any other person's or animals eyes.
- ► Always check the cable before charging. If the cable or any part of the charger is damaged, replace with a like for like spare.

TECHNICAL DATA

VARIANT	*L/HSLPB5500*	*L/HSLPB5500L*
POWER PLUG	BS	CEE
RATED VOLTAGE	220-240V ~50/60Hz	110-130V ~50/60Hz
MAX CURRENT	0.25A	0.5A
WATTAGE	47W	47W
POWER TAKE OFF	3000W (Max Load)	1500W (Max Load)
SIZE	280 x 280 x 286mm	280 x 280 x 286mm
WEIGHT	2.6kg	2.6kg
IP/IK RATING	IP54/IK08	IP54/IK08

OPERATING

Once the site light and cable have been inspected and cleared of any damage, it may be powered on. Once plugged into a suitable mains outlet, power the site light on by flicking the main ON/OFF switch to the "ON" position.

CLEANING

Use a soft cloth or cotton swab with water to clean the lens. Care should be taken during cleaning. Allow the work light to completely dry before using. Do not use any harsh chemicals or abrasive materials when cleaning, as this may damage the light.

INTENDED USE

This work light must ***ONLY*** be used for it's intended purpose. Any other than those mentioned in these instructions will be considered a case of misuse. The user, and not the manufacturer shall be liable for any damage or injury resulting from such cases of misuse. The manufacturer shall not be liable for any modifications made to the product, nor for any damage resulting from such modifications. If any modifications have been made to this work light, it may void any guarantee associated with this product.

DISPOSAL OF THIS PRODUCT

If at some point you intend to dispose of this product, please keep in mind that many of its components consist of valuable materials which can be recycled. Please do not dispose of this product in the household waste bin, check instead with your local council for recycling facilities in your area.

Lighthouse holds no responsibility for personal injury or damage caused by incorrectly disposing of this product.

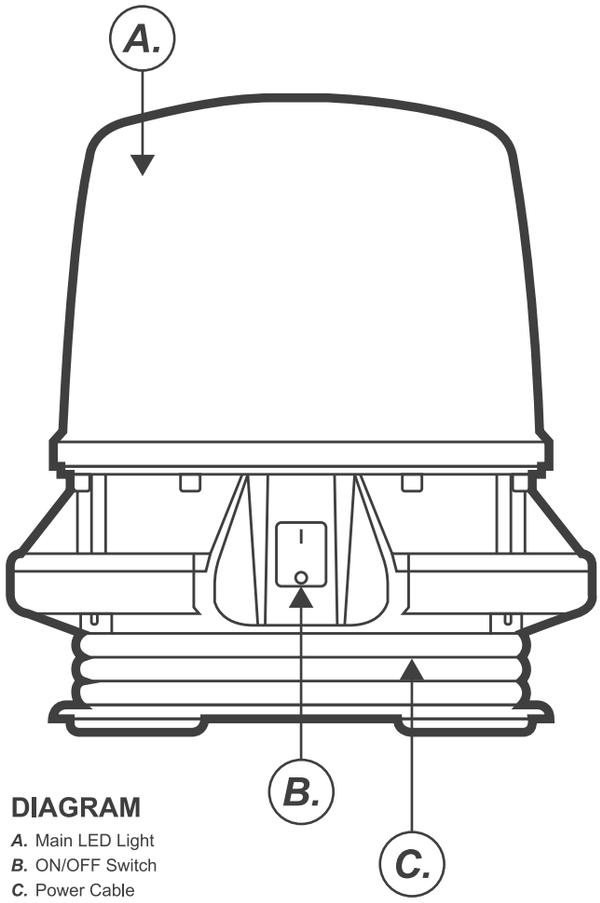

DIAGRAM

A. Main LED Light
B. ON/OFF Switch
C. Power Cable

GUARANTEE

Your product is guaranteed from defect for a period of **1 YEAR**. There will be some items within our range which will be non-serviceable but, in most cases we can supply replacement parts for our products.

INTENDED USE

This work light must ***ONLY*** be used for it's intended purpose. Any other than those mentioned in these instructions will beconsidered a case of misuse. The user, and not the manufacturer shall be liable for any damage or injury resulting from such cases of misuse. The manufacturer shall not be liable for any modifications made to the product, nor for any damage resulting from such modifications. If any modifications have been made to this work light, it may void any guarantee associated with this product.

L/HSLPB5500

L/HSLPB5500L

LIGHTHOUSE TORCHES
Long Reach, Galleon Boulevard,
Crossways Business Park, Dartford, Kent
DA2 6QE, United Kingdom.

QFF DISTRIBUTION
24 Magna Drive, Magna Business Park,
Citywest Road, Dublin 24,
D24 FNY0, Ireland.

www.lighthouse-torches.com