Dansk *(oversat fra original brugsvejledning)* 4

Deutsch *(Übersetzung der Originalanweisung)* 15

English ***(original instructions)*** 27

Español *(traducido de las instrucciones originales)* 37

Français *(traduction de la notice d'instructions originale)* 49

Italiano *(tradotto dalle istruzioni originali)* 61

Nederlands *(vertaald vanuit de originele instructies)* 73

Norsk *(oversatt fra de originale instruksjonene)* 85

Português *(traduzido das instruções originais)* 96

Suomi *(käännetty alkuperäisestä käyttöohjeesta)* 108

Svenska *(översatt från de ursprungliga instruktionerna)* 119

Türkçe *(orijinal talimatlardan çevrilmiştir)* 130

Ελληνικά *(μετάφραση από τις πρωτότυπες οδηγίες)* 141



www.DEWALT.com

DCMCS565

Fig. A

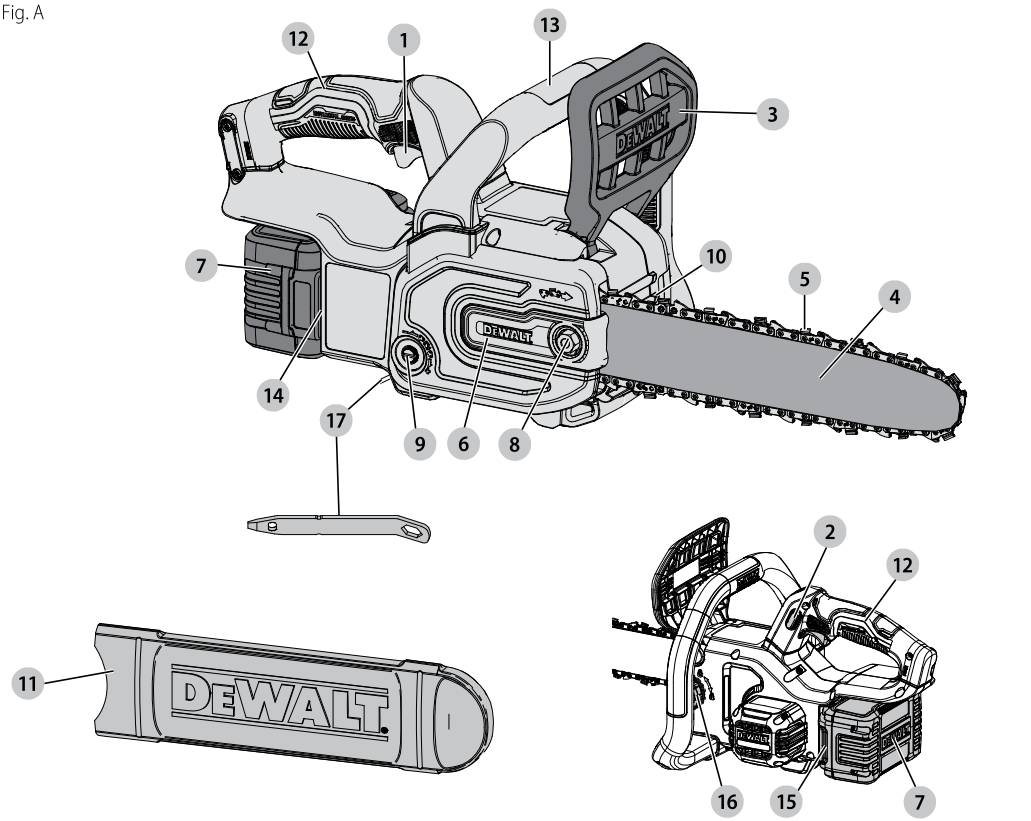

Fig. B

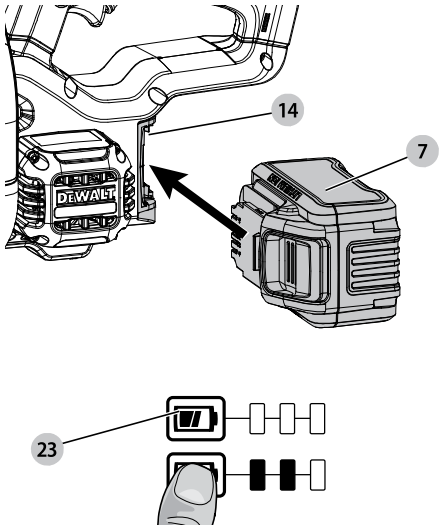

Fig. C

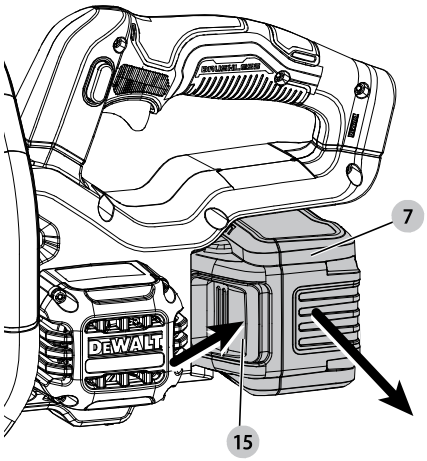

Copyright DEWALT

Fig. D

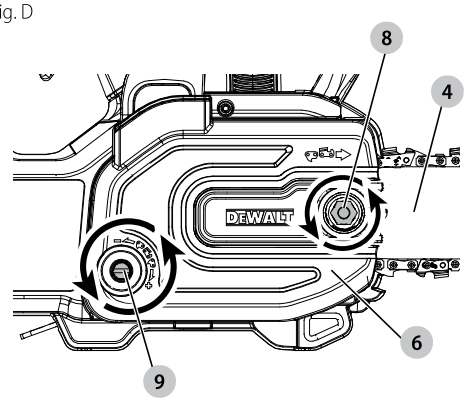

Fig. E

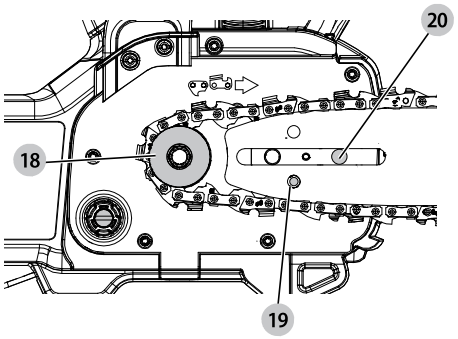

Fig. F

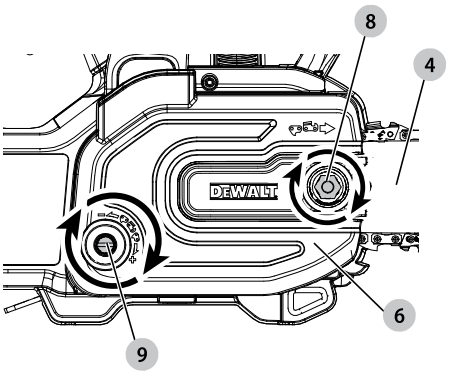

Fig. G

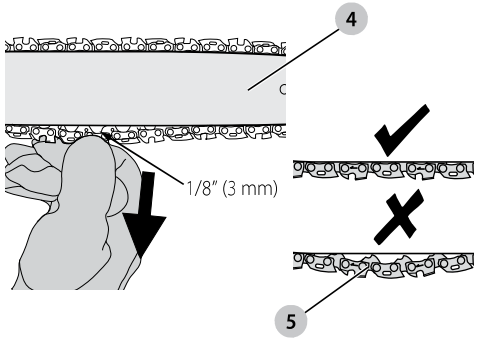

Fig. H

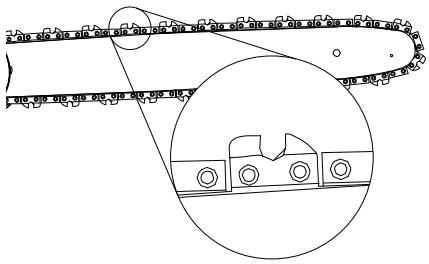

Fig. I

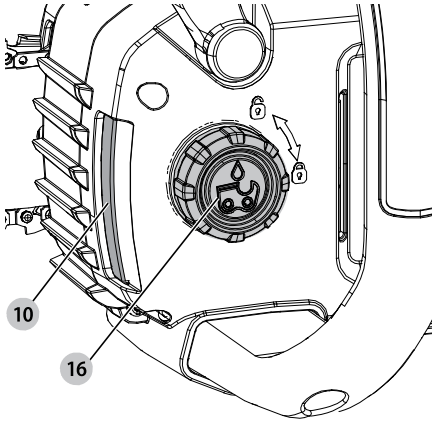

Fig. J

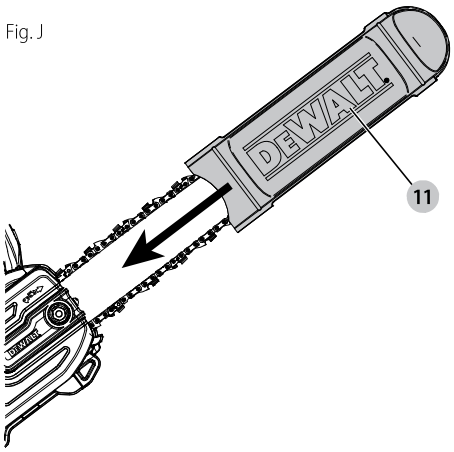

Fig. K

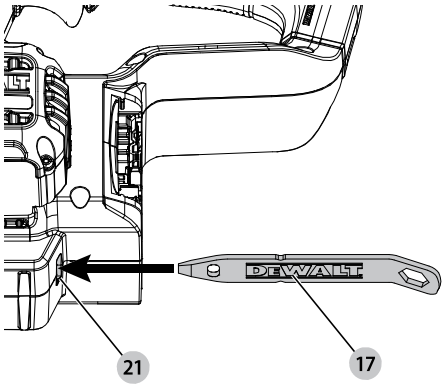

Fig. L

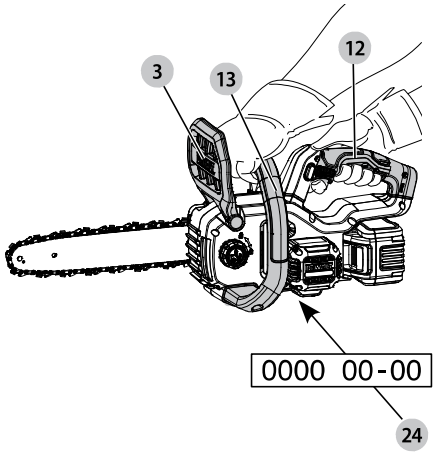

Fig. M

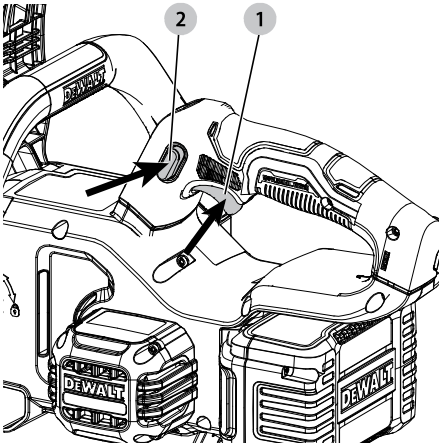

Fig. N

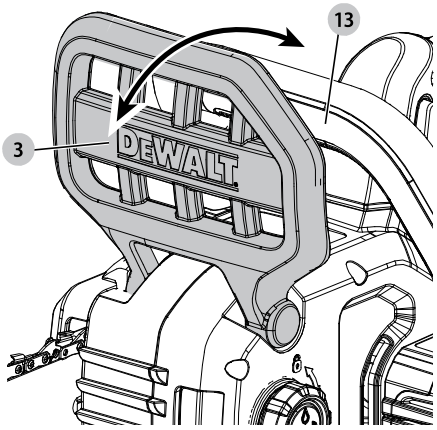

Fig. O

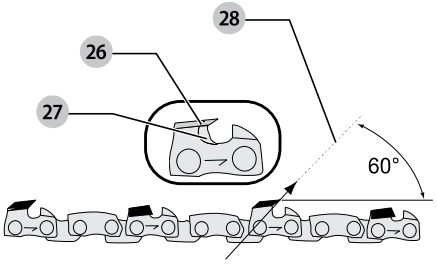

Fig. P

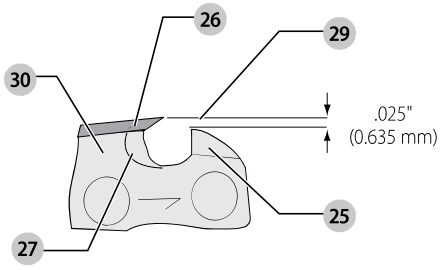

Fig. Q

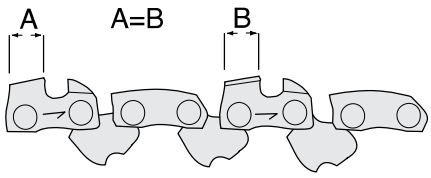

18V CHAINSAW
DCMCS565

WARNING: Read all safety warnings, instructions, illustrations, and specifications in this manual, including the battery and charger sections provided in an original tool manual or the separate Batteries and Chargers manual. *Manuals can be obtained by contacting Customer Service (refer to the back page of this manual).*

Technical Data

		DCMCS565
Voltage	V_{DC}	18
Type		1
Battery type		Li-Ion
Bar Length	cm	30
Maximum Chain Speed *(no-load)*	m/s	7.3
Maximum Cutting Length	cm	26
Oil Capacity	ml	215
Weight *(without saw chain, guide bar, guide bar cover, oil, and battery pack)*	kg	2.7

Noise values and vibration values (triax vector sum) according to EN62841-4-1.		
L_{pA} (emission sound pressure level)	dB(A)	86
K (uncertainty for the emission sound pressure level)	dB(A)	3.0
L_{WA} (sound power level)	dB(A)	95
K (uncertainty for the given sound level)	dB(A)	4.9
Vibration emission value a_h =	m/s^2	4.0
Uncertainty K =	m/s^2	1.5

The vibration and/or noise emission level given in this information sheet has been measured in accordance with a standardised test given in EN62841 and may be used to compare one tool with another. It may be used for a preliminary assessment of exposure.

WARNING: *The declared vibration and/or noise emission level represents the main applications of the tool. However, if the tool is used for different applications, with different accessories or is poorly maintained, the vibration and/or noise emission may differ. This may significantly increase the exposure level over the total working period.*

An estimation of the level of exposure to vibration and/or noise should also take into account the times when the tool is switched off or when it is running but not actually doing the job. This may significantly reduce the exposure level over the total working period.

Identify additional safety measures to protect the operator from the effects of vibration and/or noise such as: maintain the tool and the accessories, keep the hands warm (relevant for vibration), organisation of work patterns.

EC-Declaration of Conformity
Machinery Directive

CE

18V Chainsaw
DCMCS565

DEWALT declares that these products described under ***Technical Data*** are in compliance with:
2006/42/EC, EN62841-1:2015+A11:2022, EN62841-4-1:2020.
2000/14/EC, chain saw (category Annex I, item 6), Annex V
L_{WA} (measured sound power level) 95 dB(A)
L_{WA} (guaranteed sound power) 100 dB(A)
These products also comply with Directive 2014/30/EU and 2011/65/EU. For more information, please contact DEWALT at the following address or refer to the back of the manual.
The undersigned is responsible for compilation of the technical file and makes this declaration on behalf of DEWALT.



Markus Rompel
Vice-President Engineering, PTE-Europe
DEWALT, Richard-Klinger-Straße 11,
65510, Idstein, Germany
20.10.2024

WARNING: *To reduce the risk of injury, read the instruction manual.*

Definitions: Safety Guidelines

The definitions below describe the level of severity for each signal word. Please read the manual and pay attention to these symbols.

DANGER: *Indicates an imminently hazardous situation which, if not avoided,* ***will*** *result in* ***death or serious injury****.*

WARNING: *Indicates a potentially hazardous situation which, if not avoided,* ***could*** *result in* ***death or serious injury****.*

CAUTION: *Indicates a potentially hazardous situation which, if not avoided,* ***may*** *result in* ***minor or moderate injury****.*

NOTICE: *Indicates a practice* ***not related to personal injury*** *which, if not avoided,* ***may*** *result in* ***property damage****.*

Denotes risk of electric shock.

Denotes risk of fire.

GENERAL POWER TOOL SAFETY WARNINGS

WARNING: Read all safety warnings, instructions, illustrations and specifications provided with this power tool. *Failure to follow all instructions listed below may result in electric shock, fire and/or serious injury.*

SAVE ALL WARNINGS AND INSTRUCTIONS FOR FUTURE REFERENCE

The term "power tool" in the warnings refers to your mains-operated (corded) power tool or battery-operated (cordless) power tool.

1) Work Area Safety

a) ***Keep work area clean and well lit.*** *Cluttered or dark areas invite accidents.*

b) ***Do not operate power tools in explosive atmospheres, such as in the presence of flammable liquids, gases or dust.*** *Power tools create sparks which may ignite the dust or fumes.*

c) ***Keep children and bystanders away while operating a power tool.*** *Distractions can cause you to lose control.*

2) Electrical Safety

a) ***Power tool plugs must match the outlet. Never modify the plug in any way. Do not use any adapter plugs with earthed (grounded) power tools.*** *Unmodified plugs and matching outlets will reduce risk of electric shock.*

b) ***Avoid body contact with earthed or grounded surfaces, such as pipes, radiators, ranges and refrigerators.*** *There is an increased risk of electric shock if your body is earthed or grounded.*

c) ***Do not expose power tools to rain or wet conditions.*** *Water entering a power tool will increase the risk of electric shock.*

d) ***Do not abuse the cord. Never use the cord for carrying, pulling or unplugging the power tool. Keep cord away from heat, oil, sharp edges or moving parts.*** *Damaged or entangled cords increase the risk of electric shock.*

e) ***When operating a power tool outdoors, use an extension cord suitable for outdoor use.*** *Use of a cord suitable for outdoor use reduces the risk of electric shock.*

f) ***If operating a power tool in a damp location is unavoidable, use a residual current device (RCD) protected supply.*** *Use of an RCD reduces the risk of electric shock.*

3) Personal Safety

a) ***Stay alert, watch what you are doing and use common sense when operating a power tool. Do not use a power tool while you are tired or under the influence of drugs, alcohol or medication.*** *A moment of inattention while operating power tools may result in serious personal injury.*

b) ***Use personal protective equipment. Always wear eye protection.*** *Protective equipment such as a dust mask, non-skid safety shoes, hard hat or hearing protection used for appropriate conditions will reduce personal injuries.*

c) ***Prevent unintentional starting. Ensure the switch is in the off position before connecting to power source and/or battery pack, picking up or carrying the tool.*** *Carrying power tools with your finger on the switch or energising power tools that have the switch on invites accidents.*

d) ***Remove any adjusting key or wrench before turning the power tool on.*** *A wrench or a key left attached to a rotating part of the power tool may result in personal injury.*

e) ***Do not overreach. Keep proper footing and balance at all times.*** *This enables better control of the power tool in unexpected situations.*

f) ***Dress properly. Do not wear loose clothing or jewellery. Keep your hair and clothing away from moving parts.*** *Loose clothes, jewellery or long hair can be caught in moving parts.*

g) ***If devices are provided for the connection of dust extraction and collection facilities, ensure these are connected and properly used.*** *Use of dust collection can reduce dust-related hazards.*

h) ***Do not let familiarity gained from frequent use of tools allow you to become complacent and ignore tool safety principles.*** *A careless action can cause severe injury within a fraction of a second.*

4) Power Tool Use and Care

a) ***Do not force the power tool. Use the correct power tool for your application.*** *The correct power tool will do the job better and safer at the rate for which it was designed.*

b) ***Do not use the power tool if the switch does not turn it on and off.*** *Any power tool that cannot be controlled with the switch is dangerous and must be repaired.*

c) ***Disconnect the plug from the power source and/or remove the battery pack, if detachable, from the power tool before making any adjustments, changing accessories, or storing power tools.*** *Such preventive safety measures reduce the risk of starting the power tool accidentally.*

d) ***Store idle power tools out of the reach of children and do not allow persons unfamiliar with the power tool or these instructions to operate the power tool.*** *Power tools are dangerous in the hands of untrained users.*

e) ***Maintain power tools and accessories. Check for misalignment or binding of moving parts, breakage of parts and any other condition that may affect the power tool's operation. If damaged, have the power tool repaired before use.*** *Many accidents are caused by poorly maintained power tools.*

f) ***Keep cutting tools sharp and clean.*** *Properly maintained cutting tools with sharp cutting edges are less likely to bind and are easier to control.*

g) ***Use the power tool, accessories and tool bits, etc. in accordance with these instructions, taking into account the working conditions and the work to be performed.*** *Use of the power tool for operations different from those intended could result in a hazardous situation.*

h) ***Keep handles and grasping surfaces dry, clean and free from oil and grease.*** *Slippery handles and grasping surfaces do not allow for safe handling and control of the tool in unexpected situations.*

5) Battery Tool Use and Care

a) ***Recharge only with the charger specified by the manufacturer.*** *A charger that is suitable for one type of battery pack may create a risk of fire when used with another battery pack.*

b) ***Use power tools only with specifically designated battery packs.*** *Use of any other battery packs may create a risk of injury and fire.*

c) ***When battery pack is not in use, keep it away from other metal objects, like paper clips, coins, keys, nails, screws or other small metal objects, that can make a connection from one terminal to another.*** *Shorting the battery terminals together may cause burns or a fire.*

d) ***Under abusive conditions, liquid may be ejected from the battery; avoid contact. If contact accidentally occurs, flush with water. If liquid contacts eyes, additionally seek medical help.*** *Liquid ejected from the battery may cause irritation or burns.*

e) ***Do not use a battery pack or tool that is damaged or modified.*** *Damaged or modified batteries may exhibit unpredictable behaviour resulting in fire, explosion or risk of injury.*

f) ***Do not expose a battery pack or tool to fire or excessive temperature.*** *Exposure to fire or temperature above 130 °C may cause explosion.*

g) ***Follow all charging instructions and do not charge the battery pack or tool outside the temperature range***

specified in the instructions. *Charging improperly or at temperatures outside the specified range may damage the battery and increase the risk of fire.*

6) Service

a) ***Have your power tool serviced by a qualified repair person using only identical replacement parts.*** *This will ensure that the safety of the power tool is maintained.*

b) ***Never service damaged battery packs.*** *Service of battery packs should only be performed by the manufacturer or authorised service providers.*

General Chain Saw Safety Warnings

a) ***Keep all parts of the body away from the saw chain when the chain saw is operating. Before you start the chain saw, make sure the saw chain is not contacting anything.*** *A moment of inattention while operating chain saws may cause entanglement of your clothing or body with the saw chain.*

b) ***Always hold the chain saw with your right hand on the rear handle and your left hand on the front handle.*** *Holding the chain saw with a reversed hand configuration increases the risk of personal injury and should never be done.*

c) ***Hold the chain saw by insulated gripping surfaces only, because the saw chain may contact hidden wiring.*** *Saw chains contacting a "live" wire may make exposed metal parts of the chain saw "live" and could give the operator an electric shock.*

d) ***Wear eye protection. Further protective equipment for hearing, head, hands, legs and feet is recommended.*** *Adequate protective equipment will reduce personal injury from flying debris or accidental contact with the saw chain.*

e) ***Do not operate a chain saw in a tree, on a ladder, from a rooftop, or any unstable support.*** *Operation of a chain saw in this manner could result in serious personal injury.*

f) ***Always keep proper footing and operate the chain saw only when standing on fixed, secure and level surface.*** *Slippery or unstable surfaces may cause a loss of balance or control of the chain saw.*

g) ***When cutting a limb that is under tension, be alert for spring back.*** *When the tension in the wood fibres is released, the spring loaded limb may strike the operator and/or throw the chain saw out of control.*

h) ***Use extreme caution when cutting brush and saplings.*** *The slender material may catch the saw chain and be whipped toward you or pull you off balance.*

i) ***Carry the chain saw by the front handle with the chain saw switched off and away from your body. When transporting or storing the chain saw, always fit the guide bar cover.*** *Proper handling of the chain saw will reduce the likelihood of accidental contact with the moving saw chain.*

j) ***Follow instructions for lubricating, chain tensioning and changing the bar and chain.*** *Improperly tensioned or lubricated chain may either break or increase the chance for kickback.*

k) ***Cut wood only. Do not use chain saw for purposes not intended. For example: do not use chain saw for cutting metal, plastic, masonry or non-wood building materials.*** *Use of the chain saw for operations different than intended could result in a hazardous situation.*

l) ***Do not attempt to fell a tree until you have an understanding of the risks and how to avoid them.*** *Serious injury could occur to the operator or bystanders while felling a tree.*

m) ***Follow all instructions when clearing jammed material, storing or servicing the chain saw. Make sure the switch is off and the battery pack is removed.*** *Unexpected actuation of the chain saw while clearing jammed material or servicing may result in serious personal injury.*

Causes and operator prevention of kickback:

Kickback may occur when the nose or tip of the guide bar touches an object, or when the wood closes in and pinches the saw chain in the cut.

Tip contact in some cases may cause a sudden reverse reaction, kicking the guide bar up and back towards the operator.

Pinching the saw chain along the top of the guide bar may push the guide bar rapidly back towards the operator.

Either of these reactions may cause you to lose control of the saw which could result in serious personal injury. Do not rely exclusively upon the safety devices built into your saw. As a chain saw user, you should take several steps to keep your cutting jobs free from accident or injury.

Kickback is the result of chain saw misuse and/or incorrect operating procedures or conditions and can be avoided by taking proper precautions as given below:

a) ***Maintain a firm grip, with thumbs and fingers encircling the chain saw handles, with both hands on the saw and position your body and arm to allow you to resist kickback forces.*** *Kickback forces can be controlled by the operator, if proper precautions are taken. Do not let go of the chain saw.*

b) ***Do not overreach and do not cut above shoulder height.*** *This helps prevent unintended tip contact and enables better control of the chain saw in unexpected situations.*

c) ***Only use replacement guide bars and saw chains specified by the manufacturer.*** *Incorrect replacement guide bars and saw chains may cause chain breakage and/or kickback.*

d) Follow the manufacturer's sharpening and maintenance instructions for the saw chain. *Decreasing the depth gauge height can lead to increased kickback.*

The Following Precautions Should Be Followed to Minimize Kickback:

1. ***Grip saw firmly. Hold the chain saw firmly with both hands when the motor is running. Use a firm grip with thumbs and fingers encircling the chain saw handles.*** *Chain saw will pull forward when cutting on the bottom edge of the bar, and push backward when cutting along the top edge of the bar.*

2. ***Do not over reach.***

3. ***Keep proper footing and balance at all times.***

4. ***Don't let the nose of the guide bar contact a log, branch, ground or other obstruction.***

5. ***Don't cut above shoulder height.***

6. ***Use devices such as low kickback chain and reduced kickback guide bars that reduce the risks associated with kickback.***

7. ***Only use replacement bars and chains specified by the manufacturer or the equivalent.***

8. ***Never let the moving chain contact any object at the tip of the guide bar.***

9. ***Keep the working area free from obstructions such as other trees, branches, rocks, fences, stumps, etc.*** *Eliminate or avoid any obstruction that your saw chain could hit while you are cutting through a particular log or branch.*

10. ***Keep your saw chain sharp and properly tensioned. A loose or dull chain can increase the chance of kickback.***

Check tension at regular intervals with the motor stopped and tool unplugged, never with the motor running.

11. ***Begin and continue cutting only with the chain moving at full speed.*** *If the chain is moving at a slower speed, there is a greater chance for kickback to occur.*

12. ***Cut one log at a time.***

13. ***Use extreme caution when re-entering a previous cut.*** *Engage bucking spikes into wood and allow chain to reach full speed before proceeding with cut.*

14. ***Do not attempt plunge cuts or bore cuts.***

15. ***Watch for shifting logs or other forces that could close a cut and pinch or fall into chain.***

16. ***Only recommended guide bar and saw chain combination(s) that can be used and that maintains compliance with related standards.***

17. ***Use only recommended lubricants.***

Kickback Safety Features

⚠ ***WARNING:*** *The following features are included on your saw to help reduce the hazard of kickback; however such features will not totally eliminate this dangerous reaction. As a chain saw user do not rely only on safety devices. You must follow all safety precautions, instructions, and maintenance in this manual to help avoid kickback and other forces which can result in serious injury.*

- *Reduced-Kickback Guide Bar, designed with a small radius tip which reduces the size of the kickback danger zone on bar tip. A reduced - kickback guide bar is one which has been demonstrated to significantly reduce the number and seriousness of kickbacks when tested in accordance with safety requirements for electric chain saws.*
- *Low-Kickback Chain, designed with a contoured depth gauge and guard link which deflect kickback force and allow wood to gradually ride into the cutter. A low-kickback chain is a chain which has met kickback performance requirements of ANSI B175.1–2012.*
- *Do not operate chain saw while in a tree, on a ladder, on a scaffold, or from any unstable surface.*
- *Hold tool by insulated gripping surfaces when performing an operation where the cutting tool may contact hidden wiring. Contact with a "live" wire will make exposed metal parts of the tool "live" and shock the operator.*
- *Do not attempt operations beyond your capacity or experience. Read thoroughly and understand completely all instructions in this manual.*
- *Before you start chain saw, make sure saw chain is not contacting any object.*
- *Do not operate a chain saw with one hand! Serious injury to the operator, helpers, or bystanders may result from one handed operation. A chain saw is intended for two-handed use only.*
- *Keep the handles dry, clean, and free of oil or grease.*
- *Do not allow dirt, debris, or sawdust to build up on the motor or outside air vents.*
- *Stop the chain saw before setting it down.*
- *Do not cut vines and/or small under brush.*
- *Use extreme caution when cutting small size brush and saplings because slender material may catch the saw chain and be whipped toward you or pull you off balance.*

Chain Saw Names and Terms

- ***Bucking -*** *The process of cross cutting a felled tree or log into lengths.*
- ***Motor Brake (if equipped) -*** *A device used to stop the saw chain when the trigger is released.*
- ***Chain Saw Powerhead -*** *A chain saw without the saw chain and guide bar.*
- ***Drive Sprocket or Sprocket -*** *The toothed part that drives the saw chain.*
- ***Felling -*** *The process of cutting down a tree.*
- ***Felling Back Cut -*** *The final cut in a tree felling operation made on the opposite side of the tree from the notching cut.*
- ***Front Handle -*** *The support handle located at or toward the front of the chain saw.*
- ***Front Hand Guard -*** *A structural barrier between the front handle of a chain saw and the guide bar, typically located close to the hand position on the front handle.*
- ***Guide Bar -*** *A solid railed structure that supports and guides the saw chain.*
- ***Scabbard/Guide Bar Cover -*** *Enclosure fitted over guide bar to help prevent tooth contact when saw is not in use.*
- ***Kickback -*** *The backward or upward motion, or both of the guide bar occurring when the saw chain near the nose of the top area of the guide bar contacts any object such as a log or branch, or when the wood closes in and pinches the saw chain in the cut.*
- ***Kickback, Pinch -*** *The rapid pushback of the saw which can occur when the wood closes in and pinches the moving saw chain in the cut along the top of the guide bar.*
- ***Kickback, Rotational -*** *The rapid upward and backward motion of the saw which can occur when the moving saw chain near the upper portion of the tip of the guide bar contacts an object, such as a log or branch.*
- ***Limbing -*** *Removing the branches from a fallen tree.*
- ***Low-Kickback Chain -*** *A chain that complies with the kickback performance requirements of ANSI B175.1–2012 (when tested on a representative sample of chain saws.)*
- ***Normal Cutting Position -*** *Those positions assumed in performing the bucking and felling cuts.*
- ***Notching Undercut -*** *A notch cut in a tree that directs the tree's fall.*
- ***Rear Handle -*** *The support handle located at or toward the rear of the saw.*
- ***Reduced Kickback Guide Bar -*** *A guide bar which has been demonstrated to reduce kickback significantly.*
- ***Replacement Saw Chain -*** *A chain that complies with kickback performance requirements of ANSI B175.1–2012 when tested with specific chain saws. It may not meet the ANSI performance requirements when used with other saws.*
- ***Saw Chain -*** *A loop of chain having cutting teeth, that cut the wood,and that is driven by the motor and is supported by the guide bar.*
- ***Ribbed Bumper -*** *The ribs used when felling or bucking to pivot the saw and maintain position while sawing.*
- ***Switch -*** *A device that when operated will complete or interrupt an electrical power circuit to the motor of the chain saw.*
- ***Switch Linkage -*** *The mechanism that transmits motion from a trigger to the switch.*
- ***Switch Lockout -*** *A movable stop that prevents the unintentional operation of the switch until manually actuated.*

Residual Risks

In spite of the application of the relevant safety regulations and the implementation of safety devices, certain residual risks cannot be avoided. These are:

- *Impairment of hearing.*

- *Risk of personal injury due to flying particles.*
- *Risk of burns due to accessories becoming hot during operation.*
- *Risk of personal injury due to prolonged use.*

SAVE THESE INSTRUCTIONS

Battery Type

These battery packs may be used:

Battery	(kg)	Battery	(kg)
DCB546	1.08	**DCB185**	0.35
DCB547/G	1.46	**DCB187**	0.54
DCB548	1.46	**DCB189**	0.54
DCB181	0.35	**DCBP518/G**	0.75
DCB182	0.61	**DCBP518/G**	0.75
DCB183/B/G	0.40	**DCB1880**	0.98
DCB184/B/G	0.62	**DCBP318**	0.50

Refer to the battery/charger manual for more information.

Markings on Tool

The following pictograms are shown on the tool:


Read instruction manual before use.


Wear eye, ear and head protection.


Do not leave in rain.


Wear protective gloves.


Wear protective footwear.

Rotational direction of the saw chain.


Beware of chain saw kickback and contact of the guide bar tip with any object should be avoided.


Switch the tool off. Before performing any maintenance on the tool, remove the battery from the tool.



Directive 2000/14/EC guaranteed sound power.


Do not contact the guide bar tip with any object.


Always use two hands when operating the chainsaw.


Lock and unlock the chain brake.

Date Code Position (Fig. L)

The production date code **24** consists of a 4-digit year followed by a 2-digit week and is extended by a 2-digit factory code.

Description (Fig. A)

⚠ ***WARNING:*** *Never modify the power tool or any part of it. Damage or personal injury could result.*

1. On/Off trigger switch
2. Lock-off lever
3. Chain brake/front hand guard
4. Guide bar
5. Saw chain
6. Sprocket cover
7. Battery Pack†
8. Bar lock nut
9. Chain tensioning screw
10. Oil level indicator
11. Guide bar scabbard
12. Rear handle
13. Front handle
14. Battery housing
15. Battery release button
16. Oil cap
17. Wrench

†Included in some packages.

NOTE: Check for damage to parts or accessories which may have occurred during transport.

Intended Use

The DCMCS565 chainsaw is designed for cutting limbs or logs up to 25 cm in diameter.

DO NOT use under wet conditions or in presence of flammable liquids or gases.

These chainsaws are professional power tools.

DO NOT let children come into contact with the tool. Supervision is required when inexperienced operators use this tool.

- **Young children and the infirm.** This appliance is not intended for use by young children or infirm persons without supervision.
- This product is not intended for use by persons (including children) suffering from diminished physical, sensory or mental abilities; lack of experience, knowledge or skills unless they are supervised by a person responsible for their safety. Children should never be left alone with this product.
- Do not store or use the tool and battery pack in locations where the temperature may fall below 4° C (39° F) (such as outside sheds or metal buildings in winter), or reach or exceed 40° C (104° F) (such as outside sheds or metal buildings in summer).

ASSEMBLY AND ADJUSTMENTS

⚠ ***WARNING: To reduce the risk of serious personal injury, turn tool off and disconnect battery pack before making any adjustments or removing/installing attachments or accessories.*** *An accidental start-up can cause injury.*

⚠ ***WARNING:*** *Use only DEWALT batteries and chargers.*

Inserting and Removing the Battery Pack from the Tool (Fig. B, C)

NOTE: Make sure your battery pack **7** is fully charged.

To Install the Battery Pack into the Tool

1. Align the battery pack **7** with the rails inside the tool (Fig. B, C).

2. Slide it into the tool until the battery pack is firmly seated and ensure that you hear the lock snap into place.

To Remove the Battery Pack from the Tool

1. Press the battery release button 15 and firmly pull the battery pack out of the tool.
2. Insert battery pack into the charger as described in the charger section of this manual.

Fuel Gauge Battery Packs (Fig. B)

Some DEWALT battery packs include a fuel gauge which consists of three green LED lights that indicate the level of charge remaining in the battery pack.

To actuate the fuel gauge, press and hold the fuel gauge button 23. A combination of the three green LED lights will illuminate designating the level of charge left. When the level of charge in the battery is below the usable limit, the fuel gauge will not illuminate and the battery will need to be recharged.

NOTE: The fuel gauge is only an indication of the charge left on the battery pack. It does not indicate tool functionality and is subject to variation based on product components, temperature and end-user application.

Installing the Guide Bar and Saw Chain (Fig. A, D–H)

⚠ ***CAUTION:*** *Sharp chain. Always wear protective gloves when handling the chain. The chain is sharp and can cut you when it is not running.*

⚠ ***WARNING:*** *Sharp moving chain. To prevent accidental operation, ensure that battery is removed from the tool before performing the following operations. Failure to do this could result in serious personal injury.*

If the saw chain 5 and guide bar 4 are packed separately in the carton, the chain has to be attached to the bar, and both must be attached to the body of the tool.

1. Place the saw on a flat, firm surface.
2. Rotate the bar lock nut 8 counterclockwise with the wrench 17 provided.
3. Remove sprocket cover 6.
4. Wearing protective gloves, grasp the saw chain 5 and wrap it around the guide bar 4, ensuring the teeth are facing the correct direction (Fig. F).
5. Ensure the chain is properly set in the slot around the entire guide bar.
6. Place the saw chain around the sprocket 18. While lining up the slot on the guide bar with chain tensioning pin 19, and the bolt 20, on the side of the tool as shown in Fig. E.
7. Once in place, hold the bar still, replace sprocket cover 6. Install the rear of the sprocket cover first, rotate it down and make sure the bolt hole on the cover lines up with the bolt 20, on the main housing.
8. Rotate the bar lock nut 8 clockwise onto the bolt 20 with the wrench 17 until snug, then loosen nut one full turn, so that the saw chain can be properly tensioned.
9. Rotate the chain tensioning screw 9 clockwise to increase tension as shown in Fig. F. Make sure the saw chain 5 is snug around the guide bar 4. Tighten the bar lock nut 8 until snug.
10. Follow the instructions in the section ***Adjusting Chain Tension***.

Adjusting Chain Tension (Fig. A, F–H)

NOTE: Saw chain tension should be adjusted regularly before each use.

1. With the saw still on a firm surface check the saw chain 5 tension. The tension is correct when the saw chain snaps back after being pulled 1/8" (3 mm) away from the guide bar 4 with light force from the middle finger and thumb as shown in Fig. G. There should be no "sag" between the guide bar and the saw chain on the underside as shown in Fig. G.
2. To adjust saw chain tension, loosen bar lock nut 8.
3. Rotate the chain tension screw 9 located on the sprocket cover using the flat screwdriver end of the wrench 17.
4. Check saw chain tension, adjust if needed.
5. Do not over-tension the saw chain as this will lead to excessive wear and will reduce the life of the guide bar and saw chain.
6. Once saw chain tension is correct, tighten bar lock nut 8 until tight using 6 ft. lbs. (8 Nm) of torque.
7. A new chain stretches slightly during the first few hours of use. It is important to check the tension frequently (after removing the battery pack) during the first two hours of use.

Replacing the Saw Chain (Fig. A, F, I)

⚠ ***CAUTION:*** *Sharp chain. Always wear protective gloves when handling the chain. The chain is sharp and can cut you when it is not running.*

⚠ ***WARNING:*** *Sharp moving chain. To prevent accidental operation, ensure the battery is removed from the tool before performing the following operations. Failure to do this could result in serious personal injury.*

1. To remove the saw chain 5, place the saw on a flat, firm surface.
2. Remove sprocket cover 6 as described in ***Installing the Guide Bar and Saw Chain*** section.
3. Rotate the chain tension screw 9 using the flat screwdriver end of the wrench 17. Turning the screw counterclockwise allows the guide bar 4 to recede and reduces the tension on the chain so that it may be removed.
4. Wearing protective gloves, grasp the saw chain and lift the worn saw chain out of the groove in the guide bar.
5. Flip guide bar over every time you replace the chain to ensure even wear.
6. Place the new chain in the slot of the guide bar, making sure the saw teeth are facing the correct direction by matching the arrow and graphic of the saw chain on the sprocket cover 6 as shown in Fig. F.
7. Follow instructions for ***Installing the Guide Bar and Saw Chain.***

Replacement chain and bar are available from your nearest DEWALT service center.

- DCMCS565 requires replacement 12" (30 cm) chain: DT20676, service part number N580237.
- DCMCS565 requires replacement 12" (30 cm) bar and chain: DT20665, service part number NA599492.

Saw Chain and Guide Bar Oiling (Fig. A, I)

Auto Oiling System

This chain saw is equipped with an auto oiling system that keeps the saw chain and guide bar constantly lubricated.

1. The oil level indicator 10 shows the level of the oil in the chain saw. If the oil level is less than a quarter full, remove the

battery from the chain saw and refill the oil reservoir with the correct type of oil.

2. Always empty oil reservoir when finished cutting.

3. Always empty oil reservoir before storing this unit.

NOTE: Do not operate this chain saw without oil. And replenish it before the oil reservoir is empty.

NOTE: Always use DEWALT bar and chain oil, which has been designed for optimal performance. Other lubricants could clog or damage the dispenser. Always use a high-quality, biodegradable bar and chain oil for proper saw chain and bar lubrication. When pruning trees, vegetable-based bar and chain oil is recommended, as mineral-based oils may harm living trees. Never use dirty, used, or contaminated oil. Doing so may damage the tool.

Filling the Oil Reservoir

1. Unscrew counterclockwise and then remove the oil cap **16**. Fill the reservoir with the recommended bar and chain oil until the oil level has reached the top of the oil level indicator **10**.

2. Refit the oil cap and tighten clockwise.

3. Periodically switch the chain saw off and check the oil level indicator to ensure the bar and chain are being properly oiled.

Transporting Chain Saw (Fig. A, J)

• Always remove the battery from the tool, set the brake and cover the guide bar **4** with the scabbard **11** when transporting the saw.

Wrench Storage (Fig. A, K)

The wrench **17** is stored in the wrench storage slot **21** located on the bottom of the unit.

1. To use the wrench **17** pull it out of the wrench storage slot **21**.

2. To store the wrench **17** push it into the wrench storage slot **21** screwdriver end first.

OPERATION

Instructions for Use

⚠ ***WARNING:*** *Always observe the safety instructions and applicable regulations.*

⚠ ***WARNING: To reduce the risk of serious personal injury, turn tool off and disconnect battery pack before making any adjustments or removing/installing attachments or accessories.*** *An accidental start-up can cause injury.*

Proper Hand Position (Fig. L)

⚠ ***WARNING:*** *To reduce the risk of serious personal injury,* ***ALWAYS*** *use proper hand position as shown.*

⚠ ***WARNING:*** *To reduce the risk of serious personal injury,* ***ALWAYS*** *hold securely in anticipation of a sudden reaction.*

Proper hand position requires the left hand on the front handle **13**, with the right hand on the rear handle **12**.

Operating the Chain Saw (Fig. A, L–N)

⚠ ***WARNING:*** *Read and understand all instructions. Failure to follow all instructions listed below may result in electric shock, fire and/or serious personal injury.*

• *Guard Against Kickback which can result in severe injury or death. See* **General Power Tool Safety Warnings** *and* **General Chainsaw Safety Warnings,** *and* **Causes and Operator Prevention of Kickback** *and* **Kickback Safety Features**, *to avoid the risk of kickback.*

• *Do not overreach. Do not cut above chest height. Make sure your footing is firm. Keep feet apart. Divide your weight evenly on both feet.*

• *Use a firm grip with your left hand on the front handle* **13** *and your right hand on the rear handle* **12** *so that your body is to the left of the guide bar* **4** .

• *Do not hold chain saw by chain brake/front hand guard* **3**. *Keep elbow of left arm locked so that left arm is straight to withstand a kickback.*

⚠ ***WARNING:*** *Never use a cross-handed grip (left hand on the rear handle and right hand on the front handle).*

⚠ ***WARNING:*** *Never allow any part of your body to be in line with the guide bar when operating the chain saw.*

• *Never operate while in a tree, in any awkward position or on a ladder or other unstable surface. You may lose control of saw causing severe injury.*

• *Keep the chain saw running at full speed the entire time you are cutting.*

• *Allow the saw chain to cut for you. Exert only light pressure. Do not put pressure on chain saw at end of cut.*

⚠ ***WARNING: When not in use always have the chain brake engaged and battery removed.***

Setting the Chain Brake (Fig. N)

Your chain saw is equipped with a chain braking system which will stop the chain quickly in case of kickback.

1. Remove the battery from the tool.

2. To engage the chain brake, push the chain brake/front hand guard **3** forward until it clicks into place.

3. Pull the chain brake/front hand guard **3** towards the front handle **13** into the "set" position as shown in Fig. N.

4. The tool is now ready to use.

NOTE: In the event of kickback, your left hand will come in contact with the front guard, pushing it forward, toward the workpiece. This will stop the tool.

Testing the Chain Brake (Fig. A, N)

Test the chain brake before every use to make sure it operates correctly.

1. Place the tool on a flat, firm surface. Make sure the saw chain **5** is clear of the ground.

2. Grip the tool firmly with both hands and turn the chain saw on.

3. Rotate your left hand forward around the front handle **13** so the back of your hand comes in contact with the chain brake/front hand guard **3** and push it forward, toward the workpiece. The saw chain should stop immediately.

NOTE: If saw does not stop immediately, stop use of tool and bring it to an authorized service center nearest you.

⚠ ***WARNING: Make sure to set chain brake before cutting.***

ON/OFF Switch (Fig. M)

Always be sure of your footing and grip the chain saw firmly with both hands with the thumb and fingers encircling both handles.

1. To turn the unit on, push down on the the lock off lever **2**, shown in Fig. M, and squeeze the trigger switch **1**. Once the unit is running, you may release the lock off lever.

2. In order to keep the unit running you must continue to squeeze the trigger. To turn the unit off, release the trigger.

NOTE: If too much force is applied while making a cut the saw will turn off. To restart saw, you must release the trigger switch **1** before the saw will restart. Begin your cut again this time with less force. Allow the saw to cut at its own pace.

⚠ ***WARNING: Never attempt to lock a switch in the ON position.***

Common Cutting Techniques

Felling

The process of cutting down a tree. Do not fell trees in high wind conditions.

⚠ ***WARNING:*** *Felling can result in injury. It should only be performed by a trained person.*

• A retreat path should be planned and cleared as necessary before cuts are started. The retreat path should extend back and diagonally to the rear of the expected line of fall as shown below.

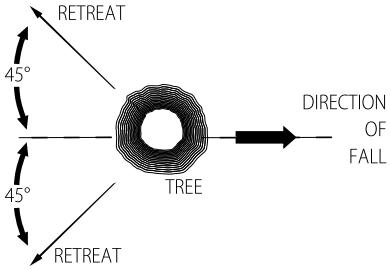

• Before felling is started, consider the natural lean of the tree, the location of larger branches and the wind direction to judge which way the tree will fall. Have wedges (wood, plastic or aluminum) and a heavy mallet handy. Remove dirt, stones, loose bark, nails, staples, and wire from the tree where the felling cuts are to be made.

• **Notching Undercut -** Make the notch 1/3 of the diameter of the tree, perpendicular to the direction of the fall. Make the lower horizontal notching cut first. This will help to avoid pinching of either the saw chain or the guide bar when the second notch cut is being made as shown below.

• **Felling Back Cut -** Make the felling back cut at least 2" (51 mm) higher than the horizontal notching cut. Keep the felling back cut parallel to the horizontal notching cut. Make the felling back cut so enough wood is left to act as a hinge. The hinge wood keeps the tree from twisting and falling in the wrong direction. Do not cut through the hinge as shown below.

• As the felling cut gets close to the hinge the tree should begin to fall. If there is any chance that the tree may not fall in the desired direction or it may rock back and bind the saw chain, stop cutting before the felling cut is complete and use wedges to open the cut and drop the tree along the desired line of fall. When the tree begins to fall remove the chainsaw from the cut, stop the motor, put the chainsaw down, then use the retreat path planned. Be alert for overhead limbs falling and watch your footing.

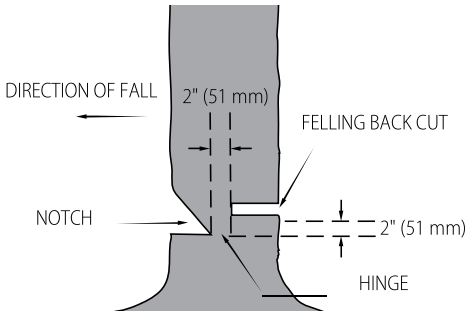

Limbing

Removing the branches from a fallen tree. When limbing, leave larger lower limbs to support the log off the ground. Remove the small limbs in one cut. Branches under tension should be cut from the bottom of the branch towards the top to avoid binding the chainsaw as shown below. Trim limbs from opposite side keeping tree stem between you and saw. Never make cuts with saw between your legs or straddle the limb to be cut.

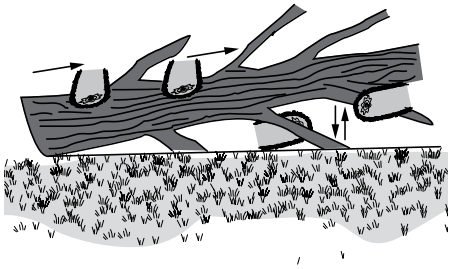

Bucking

⚠ ***WARNING:*** *Recommend that first-time users should practice cutting on a saw horse.*

Cutting a felled tree or log into lengths. How you should cut depends on how the log is supported. Use a saw horse whenever possible as shown below.

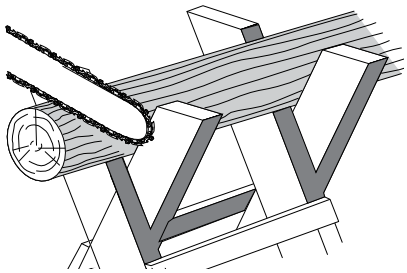

1. Always start a cut with the saw chain running at full speed.
2. Place the bottom spike **22** of the chainsaw behind the area of the initial cut as shown below.
3. Turn the chainsaw on then rotate the saw chain and bar down into the tree, using the spike as a hinge.
4. Once the chainsaw gets to a 45 ° angle, level the chainsaw again and repeat steps until you cut fully through.
5. When the tree is supported along its entire length, make a cut from the top (overbuck), but avoid cutting the earth as this will dull your saw quickly.

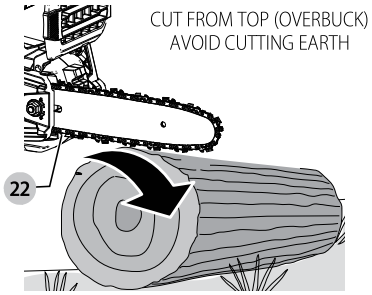

• When supported at one end first, cut 1/3 the diameter from the underside (underbuck). Then make the finishing cut by overbucking to meet the first cut as shown below.

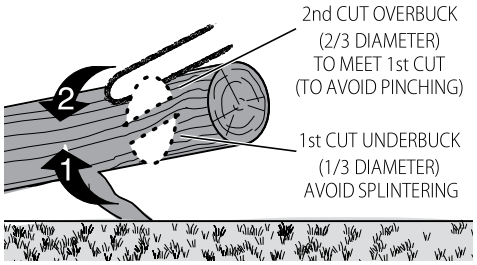

• When supported at both ends. First, cut 1/3 down from the top overbuck. Then make the finished cut by underbucking the lower 2/3 to meet the first cut as shown below.

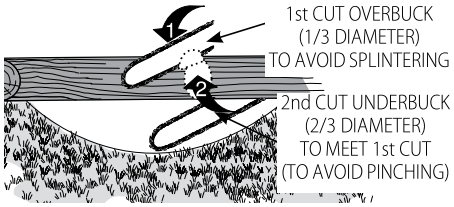

• When on a slope always stand on the uphill side of the log. When "cutting through", to maintain complete control reduce the cutting pressure near the end of the cut without relaxing your grip on the chain saw handles. Don't let the chain contact the ground. After completing the cut, wait for the saw chain to stop before you move the chain saw. Always stop the motor before moving from cut to cut.

MAINTENANCE

Your power tool has been designed to operate over a long period of time with a minimum of maintenance. Continuous satisfactory operation depends upon proper tool care and regular cleaning.

⚠ ***WARNING: To reduce the risk of serious personal injury, turn tool off and disconnect battery pack before making any adjustments or removing/installing attachments or accessories.*** *An accidental start-up can cause injury.*

The charger and battery pack are not serviceable.

Please refer to the back page of this manual for service centre contact information, or visit **www.2helpU.com**.

Saw Chain and Guide Bar

After every few hours of use, remove the sprocket cover, guide bar and chain and clean thoroughly using a soft bristle brush. Ensure oiling hole on bar is clear of debris. When replacing dull chains with sharp chains it is good practice to flip the chain bar from bottom to top.

For best performance, have sharpening and maintenance of the saw chain performed by an authorised DEWALT service centre.

Sprocket and Sprocket Cover (Fig. A, F, I)

⚠ ***CAUTION:*** *Sharp chain. Always wear protective gloves when handling the chain. The chain is sharp and can cut you when it is not running.*

⚠ ***WARNING:*** *Sharp moving chain. To prevent accidental operation, ensure the battery is removed from the tool before performing the following operations. Failure to do this could result in serious personal injury.*

1. Place the saw on a flat, firm surface.
2. Remove sprocket cover **6** as described in ***Installing the Guide Bar and Saw Chain*** section.
3. Wearing protective gloves, use a clean, soft bristle brush to wipe away any saw dust, sticks, vines or other debris that may have collected inside the sprocket cover **6** and around the saw chain **5** or sprocket **18**.
4. Rotate the chain tension screw **9** using the flat screwdriver end of the wrench **17**. Turning the screw counterclockwise allows the guide bar **4** to recede and reduces the tension on the chain so that it may be removed.
5. Wearing protective gloves, grasp the saw chain and guide bar and lift them away from the tool.
6. Wearing protective gloves, use a clean, soft bristle brush to wipe away any saw dust or other debris that may have collected on the guide bar **4** and around the saw chain **5**.
7. Install the chain, guide bar and sprocket cover **6** as described in ***Installing the Guide Bar and Saw Chain, Replacing the Saw Chain*** sections and adjust chain tension properly before use as described in the ***Adjusting Chain Tension*** section.

Saw Chain Sharpening (Fig. O–Q)

⚠ ***CAUTION:*** *Sharp chain. Always wear protective gloves when handling the chain. The chain is sharp and can cut you when it is not running.*

⚠ ***WARNING:*** *Sharp moving chain. To prevent accidental operation, ensure that battery is removed from the tool before performing the following operations. Failure to do this could result in serious personal injury.*

⚠ ***WARNING:*** *Do not over file chain rakers* ***25****, this will increase the risk of kickback. If the chain* **5** *has been sharpened more than four times, replace it.*

Each time the chain **5** is sharpened, it loses some of the low kickback qualities and extra caution should be used.

It is recommended that a saw chain be sharpened no more than four times.

NOTE: The cutters **27** will dull immediately if they touch the ground/dirt or a nail while cutting.

To get the best possible performance from your pole saw it is important to keep the cutters **27** of the saw chain sharp. Follow these helpful tips for proper saw chain sharpening:

1. For best results use a 5/16" (4 mm) file and a file holder or filing guide to sharpen your saw chain. This will ensure you always get the correct sharpening angles.
2. Place the file holder flat on the top plate **26** and depth gauge of the cutter **27**.
3. Keep the correct top plate **26** filing angle line of 30 ° **28** on your file guide parallel with your chain (file at 60 ° from chain viewed from the side) as shown in Fig. O.
4. Sharpen cutters **27** on one side of the chain **5** first. File from the inside of each cutter to the outside. Then turn your saw around and repeat the processes (2, 3, 4) for cutters on the other side of the chain.

NOTE: Use a flat file to file the tops of the rakers **29** (portion of chain link in front of the cutter **27** so they are about .025" (6.35 mm) below the tips of the cutters as shown in Fig. P.

5. Keep all cutter lengths equal as shown in Fig. Q.

6. If damage is present on the chrome surface of the top plates **26** or side plates **30**, file back until such damage is removed.

⚠ ***CAUTION:*** *After filing, the cutter will be sharp, use extra caution during this process.*

Lubrication

Your power tool requires no additional lubrication.

Cleaning

⚠ ***WARNING:*** *Electrical shock and mechanical hazard. Disconnect the electrical appliance from the power source before cleaning.*

⚠ ***WARNING:*** *To ensure safe and efficient operation, always keep the electrical appliance and the ventilation slots clean.*

⚠ ***WARNING:*** *Never use solvents or other harsh chemicals for cleaning the non-metallic parts of the tool. These chemicals may weaken the materials used in these parts. Use a cloth dampened only with water and mild soap. Never let any liquid get inside the tool; never immerse any part of the tool into a liquid.*

Ventilation slots can be cleaned using a dry, soft non-metallic brush and/or a suitable vacuum cleaner. Do not use water or any cleaning solutions. Wear approved eye protection and an approved dust mask.

Optional Accessories

⚠ ***WARNING:*** *Since accessories, other than those offered by DEWALT, have not been tested with this product, use of such accessories with this tool could be hazardous. To reduce the risk of injury, only DEWALT-recommended accessories should be used with this product.*

Consult your dealer for further information on the appropriate accessories.

Protecting the Environment



Products/batteries are recyclable, but if marked with the crossed-out bin, they must not be disposed of with normal household waste.

Run the batteries down completely and separate them, and separate any light sources from the product if possible. It is the user's responsibility to delete personal data from the product. Then take the waste to an official waste collection center or a participating retailer who will often accept it free of charge. Packaging should be discarded based on the marked material code. Operating and safety instructions should only be discarded once the applicable product is no longer in use.

Please check with your local community/municipality for waste management guidance. For further information, visit **www.2helpU.com** and scan the above QR code.

DCMCS565 TROUBLESHOOTING

Problem	Solution
Unit will not start.	• Check battery installation. • Check battery charging requirements. • Check that lock-off is fully pushed down prior to moving main trigger. • Check that the chain brake is not engaged.
Unit shuts down in use.	• Charge battery. • Unit is being forced. Restart and apply less pressure.
Battery won't charge.	• Insert battery into charger until red charging light illuminates. Charge up to 8 hours if battery is totally drained. • Plug charger into a working outlet. • Check current at receptacle by plugging in an appliance. • Check to see if receptacle is connected to a light switch which turns power off when you turn out the lights. • Move charger and appliance to a surrounding air temperature of above 4.5 ° C or below 40.5 ° C.
Bar / Chain overheated.	• Refer to ***Adjusting Chain Tension*** section. • Refer to ***Saw Chain and Guide Bar Oiling*** section.
Chain is loose.	• Refer to ***Adjusting Chain Tension*** section.
Poor cut quality.	• Refer to ***Adjusting Chain Tension*** section. **NOTE:** Excessive tension leads to excessive wear and reduction in life of bar and chain. Lubricate before each cut. Refer to ***Replacing the Saw Chain*** section. • Chain cutters may be dulled. Refer to ***Saw Chain Sharpening*** section.
Unit runs but does not cut.	• Chain could be installed backwards. Refer to sections for installing and removing chain. • Chain cutters may be dulled. Refer to ***Saw Chain Sharpening*** section.
Unit does not oil.	• Refill oil reservoir. • Clean guide bar, sprocket and sprocket cover. Refer to ***Maintenance*** section.

MOTOSIERRA DE 18 V
DCMCS565

ADVERTENCIA: Lea todas las advertencias de seguridad, instrucciones, ilustraciones y especificaciones contenidas en este manual, incluidos los apartados sobre la batería y el cargador del manual original de la herramientas o de los manuales separados de las baterías y los cargadores. *Puede obtener los manuales contactando con el Servicio al Cliente (consulte la página trasera de este manual).*

Datos técnicos

		DCMCS565
Tensión	V_{cc}	18
Tipo		1
Tipo de batería		Iones de litio
Longitud de la barra	cm	30
Velocidad máx. de la cadena *(sin carga)*	m/s	7.3
Máxima longitud de corte	cm	26
Capacidad de aceite	ml	215
Peso *(sin la cadena de la sierra, la barra guía, la tapa de la barra guía, el aceite ni la batería)*	kg	2.7

Valores de ruido y valores de vibración (suma vectores triaxiales) de acuerdo con EN62841-4-1.

L_{PA}	(nivel de presión sonora de emisiones)	dB(A)	86
K	(incertidumbre del nivel de presión sonora de emisión)	dB(A)	3.0
L_{WA}	(nivel de potencia sonora)	dB(A)	95
K	(incertidumbre del nivel sonoro dado)	dB(A)	4.9

Valor de emisión de vibraciones en a_h =	m/s^2	4.0
Incertidumbre K =	m/s^2	1.5

El nivel de vibraciones y/o de emisión de ruido que se indica en esta hoja informativa ha sido medido de acuerdo con una prueba normalizada indicada en la norma EN62841 y puede utilizarse para comparar herramientas entre sí. Puede usarse para una evaluación preliminar de la exposición.

⚠ ***ADVERTENCIA:*** *El nivel de emisión de vibraciones y/o ruido declarado se refiere a las principales aplicaciones de la herramienta. Sin embargo, si se utiliza la herramienta para otras aplicaciones, con accesorios diferentes o mantenidos de forma incorrecta, la emisión de ruido o vibraciones puede variar. Esto puede aumentar considerablemente el nivel de exposición durante el período total de trabajo.*

Para valorar el nivel de exposición al ruido o a las vibraciones, también deberían tenerse en cuenta las veces que la herramienta está apagada o en funcionamiento pero sin realizar ningún trabajo. Esto puede reducir considerablemente el nivel de exposición durante el periodo total de trabajo.

Identifique medidas de seguridad adicionales para proteger al operador de los efectos del ruido y las vibraciones, como, por ejemplo, realizar el mantenimiento de la herramienta y de los accesorios, mantener las manos calientes (relevante para las vibraciones) u organizar patrones de trabajo.

Declaración de conformidad CE
Directiva de máquinas

CE

Motosierra de 18 V
DCMCS565

DEWALT declara que los productos descritos en ***Datos técnicos*** cumplen las siguientes normas:
2006/42/CE, EN62841-1:2015+A11:2022, EN62841-4-1:2020.
2000/14/CE, motosierra (Anexo categoría I, art. 6), Annex V
L_{WA} (nivel de potencia acústica medida) 95 dB(A)
L_{WA} (potencia acústica garantizada) 100 dB(A)
Estos productos también cumplen las Directivas 2014/30/UE y 2011/65/UE. Para más información, contacte con DEWALT en la siguiente dirección o consulte el reverso del manual.
El abajo firmante es el responsable de la elaboración de la documentación técnica y expide la presente declaración en nombre y representación de DEWALT..



Markus Rompel
Vicepresidente de Ingeniería, PTE-Europe
DEWALT, Richard-Klinger-Straße 11,
65510, Idstein, Alemania
20.10.2024

ADVERTENCIA: *Para reducir el riesgo de lesiones, lea el manual de instrucciones.*

Definiciones: normas de seguridad

Las siguientes definiciones describen el nivel de gravedad de las señales. Lea el manual y preste atención a estos símbolos.

⚠ ***PELIGRO:*** *Indica una situación de peligro inminente, que si no se evita,* ***provocará*** *la* ***muerte o lesiones graves****.*

⚠ ***ADVERTENCIA:*** *Indica una situación de posible peligro que, si no se evita,* ***podría provocar la muerte o lesiones graves****.*

⚠ ***ATENCIÓN:*** *Indica una situación de posible peligro que, si no se evita,* ***puede provocar lesiones leves o moderadas****.*

AVISO: *Indica una práctica* ***no relacionada con las lesiones personales*** *que, de no evitarse,* ***puede*** *ocasionar* ***daños materiales****.*

⚠ *Indica riesgo de descarga eléctrica.*

⚠ *Indica riesgo de incendio.*

ADVERTENCIAS DE SEGURIDAD GENERALES PARA HERRAMIENTAS ELÉCTRICAS

⚠ ***ADVERTENCIA: Lea todas las advertencias de seguridad, instrucciones, ilustraciones y especificaciones suministradas con esta herramienta eléctrica.*** *El incumplimiento de las instrucciones que se indican a continuación puede causar descargas eléctricas, incendios y/o lesiones graves.*