DEWALT®

XR LI-ION

www.DEWALT.com

DCM563

Copyright DEWALT

Figure 1

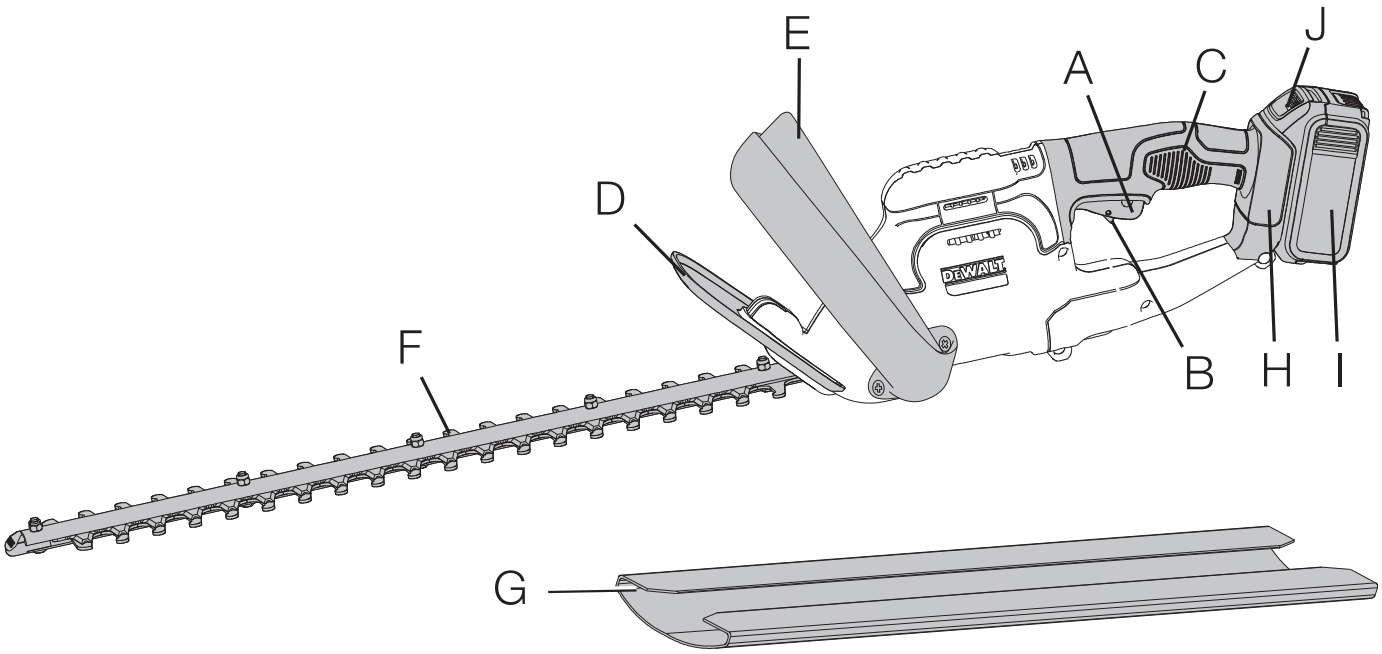

Figure 2

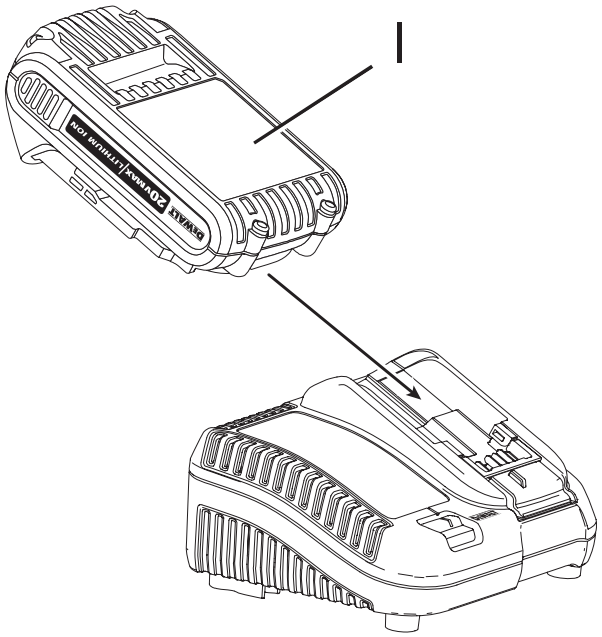

Figure 3

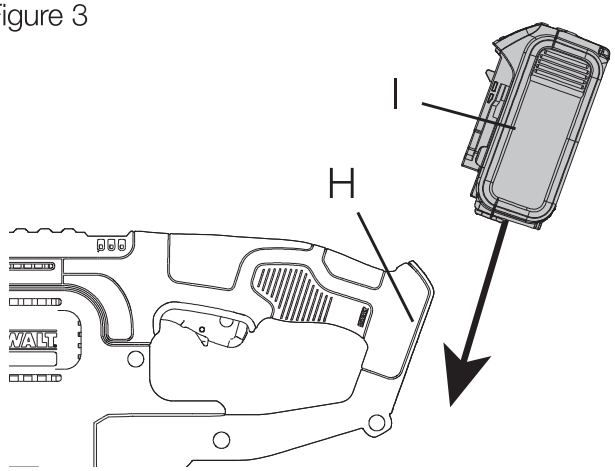

Figure 4

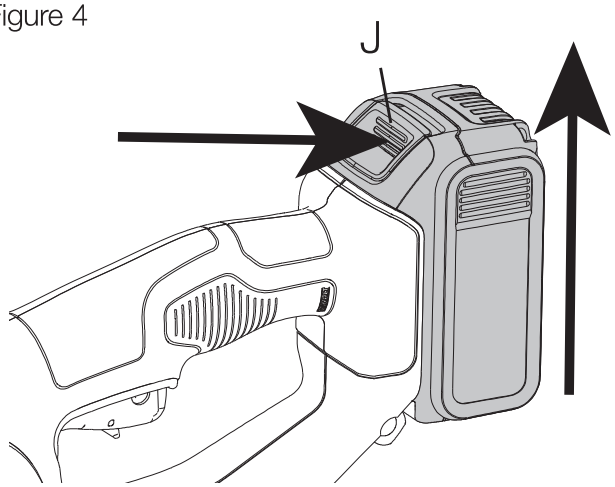

Figure 5

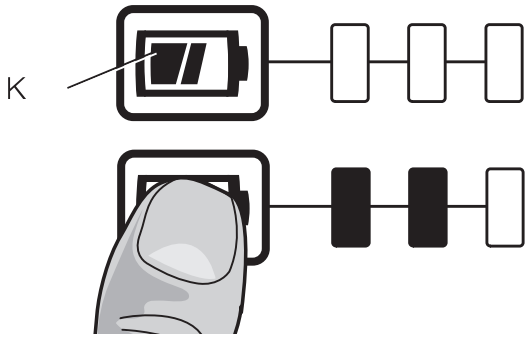

Figure 6

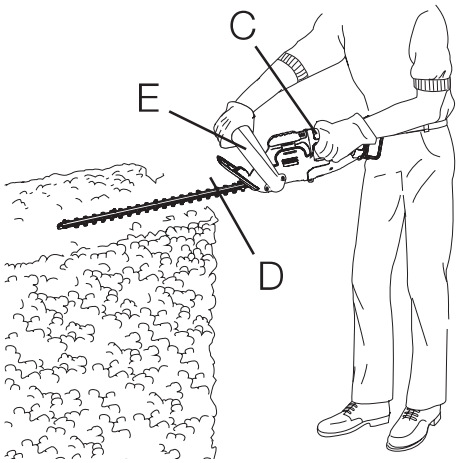

Figure 7

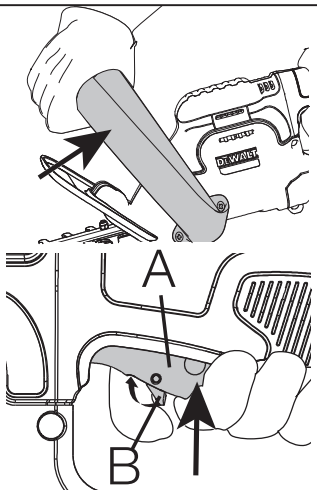

Figure 8

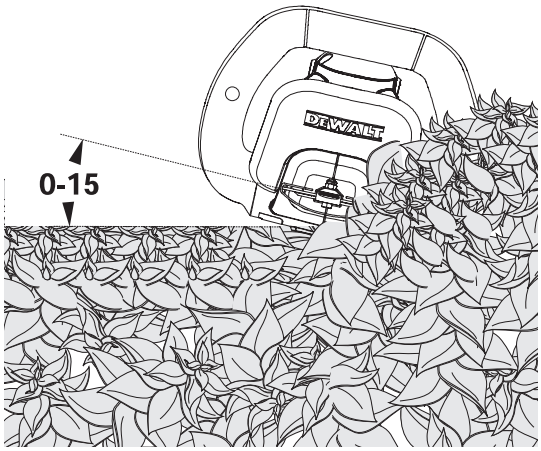

Figure 9

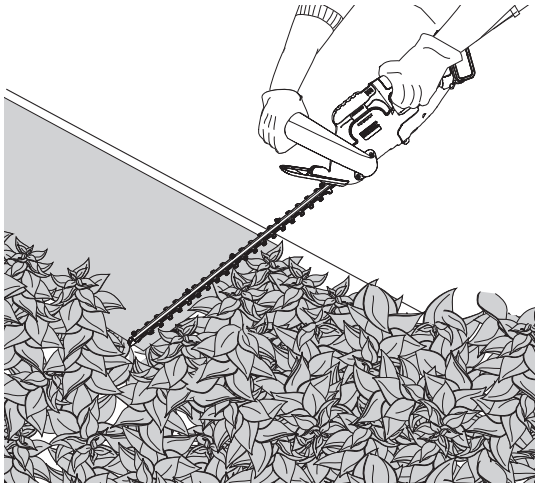

Figure 10

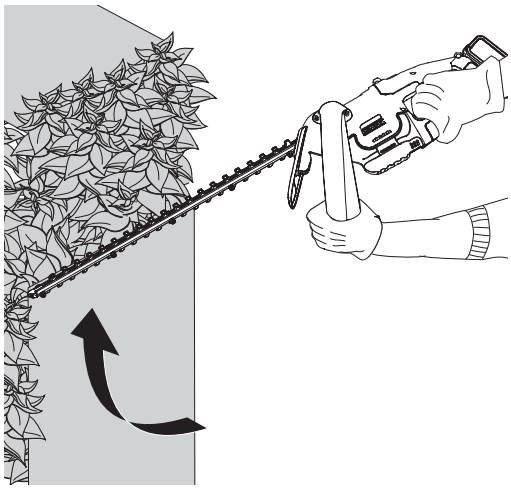

Figure 11

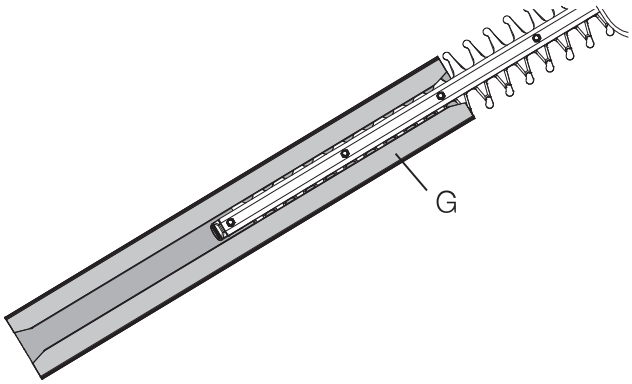

Figure 12

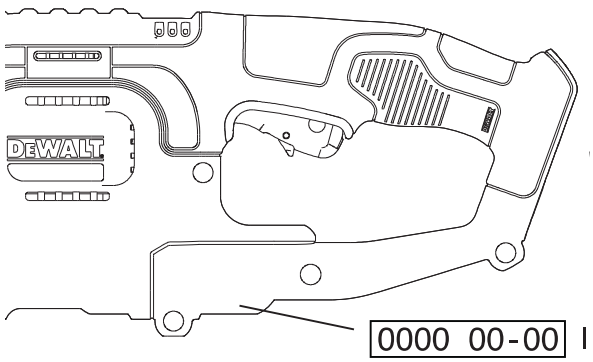

HEDGE TRIMMER
DCM563

Congratulations!

You have chosen a DEWALT tool. Years of experience, thorough product development and innovation make DEWALT one of the most reliable partners for professional power tool users.

Technical Data

		DCM563
Voltage	V_{DC}	18
UK & Ireland	V_{DC}	18
Type		1
Blade strokes (no load)	min^{-1}	1400
Blade length	cm	55.8
Blade gap	mm	19
Blade break time	s	<1
Weight	kg	3.5
Weight (without battery pack)	kg	2.9

Noise values and vibration values (triax vector sum) according to 2006/42/EC, 2004/108/EC EN 60745

L_{PA} (emission sound pressure level)	dB(A)	80.5
L_{WA} (sound power level)	dB(A)	98
K (uncertainty for the given sound level)	dB(A)	6.5
Vibration emission value a_h =	m/s^2	2
Uncertainty K =	m/s^2	1.5

The vibration emission level given in this information sheet has been measured in accordance with a standardised test given in EN 60745 and may be used to compare one tool with another. It may be used for a preliminary assessment of exposure.

WARNING: *The declared vibration emission levelasdfarepresents the main applications of the tool. However if the tool is used for different applications, with different accessories or poorly maintained, the vibration emission may differ. This may significantly increase the exposure level over the total working period.*

An estimation of the level of exposure to vibration should also take into account the times when the tool is switched off or when it is running but not actually doing the job. This may significantly reduce the exposure level over the total working period.

Identify additional safety measures to protect the operator from the effects of vibration such as: maintain the tool and the accessories, keep the hands warm, organisation of work patterns.

Battery pack		DCB180	DCB181	DCB182	DCB183	DCB184	DCB185
Battery type		Li-Ion	Li-Ion	Li-Ion	Li-Ion	Li-Ion	Li-Ion
Voltage	V_{DC}	18	18	18	18	18	18
Capacity	A_h	3.0	1.5	4.0	2.0	5.0	1.3
Weight	kg	0.64	0.35	0.61	0.40	0.62	0.35

Charger			DCB115	
Mains voltage	V_{AC}		230	
Battery type			10.8/14.4/18 Li-Ion	
Approx. charging time of battery packs	min	22 (1.3 Ah)	22 (1.5 Ah)	30 (2.0 Ah)
		45 (3.0 Ah)	60 (4.0 Ah)	75 (5.0 Ah)
Weight	kg		0.5	

Fuses:		
Europe	230 V tools	10 Amperes, mains
U.K. & Ireland	230 V tools	3 Amperes, in plugs

Definitions: Safety Guidelines

The definitions below describe the level of severity for each signal word. Please read the manual and pay attention to these symbols.

DANGER: *Indicates an imminently hazardous situation which, if not avoided,* ***will*** *result in* ***death or serious injury****.*

WARNING: *Indicates a potentially hazardous situation which, if not avoided,* ***could*** *result in* ***death or serious injury****.*

CAUTION: *Indicates a potentially hazardous situation which, if not avoided,* ***may*** *result in* ***minor or moderate injury****.*

NOTICE: *Indicates a practice* ***not related to personal injury*** *which, if not avoided,* ***may*** *result in* ***property damage****.*

Denotes risk of electric shock.

Denotes risk of fire.

EC-Declaration of Conformity

MACHINERY DIRECTIVE
OUTDOOR NOISE DIRECTIVE

CE

HEDGE TRIMMER
DCM563

DEWALT declares that these products described under ***Technical Data*** are in compliance with:
2006/42/EC, EN 60745-1:2009 + A11:2010; EN 60745-2-15:2009 + A1:2010
2000/14/EC, Hedge Trimmer, Annex VI
DEKRA Certification B.V., Utrechtseweg 310, 6802 ED Arnhem, The Netherlands
Notified Body ID No.: 0344

Level of accoustic power according to 2000/14/EC (Article 13, Annex III):
L_{WA} (measured sound power) 91.5 dB(A)
Uncertainty = 6 dB(A)
L_{WA} (guaranteed sound power) 98 dB(A)

These products also comply with Directive 2004/108/EC (until 19.04.2016), 2014/30/EU (from 20.04.2016) and 2011/65/EU. For more information, please contact DEWALT at the following address or refer to the back of the manual.

The undersigned is responsible for compilation of the technical file and makes this declaration on behalf of DEWALT.



Markus Rompel
Director Engineering
DEWALT, Richard-Klinger-Straße 11,
D-65510, Idstein, Germany
DD.MM.2015

WARNING: *To reduce the risk of injury, read the instruction manual.*

General Appliance Safety Warnings

WARNING: *Read all safety warnings and all instructions. Failure to follow the warnings and instructions may result in electric shock, fire and/or serious injury.*

SAVE ALL WARNINGS AND INSTRUCTIONS FOR FUTURE REFERENCE

The term "power tool" in the warnings refers to your mains-operated (corded) power tool or battery-operated (cordless) power tool.

1) WORK AREA SAFETY

a) ***Keep work area clean and well lit.*** *Cluttered or dark areas invite accidents.*

b) ***Do not operate power tools in explosive atmospheres, such as in the presence of flammable liquids, gases or dust.*** *Power tools create sparks which may ignite the dust or fumes.*

c) ***Keep children and bystanders away while operating a power tool.*** *Distractions can cause you to lose control.*

2) ELECTRICAL SAFETY

a) ***Power tool plugs must match the outlet. Never modify the plug in any way. Do not use any adapter plugs with earthed (grounded) power tools.*** *Unmodified plugs and matching outlets will reduce risk of electric shock.*

b) ***Avoid body contact with earthed or grounded surfaces such as pipes, radiators, ranges and refrigerators.*** *There is an increased risk of electric shock if your body is earthed or grounded.*

c) ***Do not expose power tools to rain or wet conditions.*** *Water entering a power tool will increase the risk of electric shock.*

d) ***Do not abuse the cord. Never use the cord for carrying, pulling or unplugging the power tool. Keep cord away from heat, oil, sharp edges or moving parts.*** *Damaged or entangled cords increase the risk of electric shock.*

e) ***When operating a power tool outdoors, use an extension cord suitable for outdoor use.*** *Use of a cord suitable for outdoor use reduces the risk of electric shock.*

f) ***If operating a power tool in a damp location is unavoidable, use a residual current device (RCD) protected supply.*** *Use of an RCD reduces the risk of electric shock.*

3) PERSONAL SAFETY

a) ***Stay alert, watch what you are doing and use common sense when operating a power tool. Do not use a power tool while you are tired or under the influence of drugs, alcohol or medication.*** *A moment of inattention while operating power tools may result in serious personal injury.*

b) ***Use personal protective equipment. Always wear eye protection.*** *Protective equipment such as dust mask, non-skid safety shoes, hard hat, or hearing protection used for appropriate conditions will reduce personal injuries.*

c) ***Prevent unintentional starting. Ensure the switch is in the off position before connecting to power source and/or battery pack, picking up or carrying the tool.*** *Carrying power tools with your finger on the switch or energising power tools that have the switch on invites accidents.*

d) ***Remove any adjusting key or wrench before turning the power tool on.*** *A wrench or a key left attached to a rotating part of the power tool may result in personal injury.*

e) ***Do not overreach. Keep proper footing and balance at all times.*** *This enables better control of the power tool in unexpected situations.*

f) ***Dress properly. Do not wear loose clothing or jewellery. Keep your hair, clothing and gloves away from moving parts.*** *Loose clothes, jewellery or long hair can be caught in moving parts.*

g) ***If devices are provided for the connection of dust extraction and collection facilities, ensure these are connected and properly used.*** *Use of dust collection can reduce dust-related hazards.*

4) POWER TOOL USE AND CARE

a) ***Do not force the power tool. Use the correct power tool for your application.*** *The correct power tool will do the job better and safer at the rate for which it was designed.*

b) ***Do not use the power tool if the switch does not turn it on and off.*** *Any power tool that cannot be controlled with the switch is dangerous and must be repaired.*

c) ***Disconnect the plug from the power source and/or the battery pack from the power tool before making any adjustments, changing accessories, or storing power tools.*** *Such preventive safety measures reduce the risk of starting the power tool accidentally.*

d) ***Store idle power tools out of the reach of children and do not allow persons unfamiliar with the power tool or these instructions to operate the power tool.*** *Power tools are dangerous in the hands of untrained users.*

e) ***Maintain power tools. Check for misalignment or binding of moving parts, breakage of parts and any other condition that may affect the power tool's operation. If damaged, have the power tool repaired before use.*** *Many accidents are caused by poorly maintained power tools.*

f) ***Keep cutting tools sharp and clean.*** *Properly maintained cutting tools with sharp cutting edges are less likely to bind and are easier to control.*

g) ***Use the power tool, accessories and tool bits etc., in accordance with these instructions taking into account the working conditions and the work to be performed.*** *Use of the power tool for*

operations different from those intended could result in a hazardous situation.

5) BATTERY TOOL USE AND CARE

a) ***Recharge only with the charger specified by the manufacturer.*** *A charger that is suitable for one type of battery pack may create a risk of fire when used with another battery pack.*

b) ***Use power tools only with specifically designated battery packs.*** *Use of any other battery packs may create a risk of injury and fire.*

c) ***When battery pack is not in use, keep it away from other metal objects like paper clips, coins, keys, nails, screws or other small metal objects that can make a connection from one terminal to another.*** *Shorting the battery terminals together may cause burns or a fire.*

d) ***Under abusive conditions, liquid may be ejected from the battery; avoid contact. If contact accidentally occurs, flush with water. If liquid contacts eyes, additionally seek medical help.*** *Liquid ejected from the battery may cause irritation or burns.*

6) SERVICE

a) ***Have your power tool serviced by a qualified repair person using only identical replacement parts.*** *This will ensure that the safety of the power tool is maintained.*

Additional power tool safety warnings

WARNING: *Additional safety warnings for hedge trimmers*

- **Keep all parts of the body away from the cutter blade. Do not remove cut material or hold material to be cut when blades are moving. Make sure the switch is off when clearing jammed material.** *A moment of inattention while operating the tool can result in serious personal injury.*
- **Carry the hedge trimmer by the handle with the cutter blade stopped. When transporting or storing the hedge trimmer always fit the cutting device cover.** *Proper handling of the hedge trimmer will reduce possible personal injury from the cutter blades.*
- **Hold the power tool by insulated gripping surfaces only, because the cutter blade may contact hidden wiring.** *Cutter blades contacting a "live" wire may make exposed metal parts of the power tool "live" and could give the operator an electric shock.*
- *The intended use is described in this instruction manual. The use of any accessory or attachment or performance of any operation with this tool other than those recom- mended in this instruction manual can present a risk of personal injury and/or damage to property.*
- *Do not carry the tool with your hands on the front handle, switch or the trigger switch unless the battery has been removed.*
- *If you have not used a hedge trimmer before, preferably seek practical instruction by an experienced user in addition to studying this manual.*
- *Never touch the blades while the tool is running.*
- *Never attempt to force the blades to come to a standstill.*
- *Do not put the tool down until the blades have come to a complete standstill.*
- *Regularly check the blades for damage and wear. Do not use the tool when the blades are damaged.*
- *Take care to avoid hard objects (e.g. metal wire, railings) when trimming. Should you accidentally hit any such object, immediately switch the tool off and check for any damage.*
- *Should the tool start to vibrate abnormally, immediately switch it off and remove the battery then check for any damage.*
- *If the tool stalls, immediately switch it off. Remove the battery before attempting to remove any obstructions.*
- *After use, place the blade sheath supplied over the blades. Store the tool, making sure that the blade is not exposed.*
- *Always ensure that all guards are fitted when using the tool. Never attempt to use an incomplete tool or a tool with unauthorised modifications.*
- *Never allow children to use the tool.*
- *Be aware of falling debris when cutting the higher sides of a hedge.*
- *Always hold the tool with both hands and by the handles provided.*

SAFETY OF OTHERS

- *This appliance is not intended for use by persons (including children) with reduced physical, sensory or mental capabilities, or lack of experience and knowledge, unless they have been given supervision or instruction concerning use of the appliance by a person responsible for their safety.*
- *Children should be supervised to ensure that they do not play with the appliance.*

Residual risks.

Additional residual risks may arise when using the tool which may not be included in the enclosed safety warnings. These risks can arise from misuse, prolonged use etc. Even with the application of the relevant safety regulations and the implementation of safety devices, certain residual risks can not be avoided. These include:

- *Injuries caused by touching any rotating/moving parts.*
- *Injuries caused when changing any parts, blades or accessories.*
- *Injuries caused by prolonged use of a tool. When using any tool for prolonged periods ensure you take regular breaks.*
- *Impairment of hearing.*
- *Health hazards caused by breathing dust developed whenusing your tool (example:- working with wood, especially oak, beech and MDF.)*

Vibration

The declared vibration emission values stated in the technical data and the declaration of conformity have been measured in accordance with a standard test method provided by EN 60745 and may be used for comparing one tool with another. The declared vibration emission value may also be used in a preliminary assessment of exposure.

WARNING: The vibration emission value during actual use of the power tool can differ from the declared value depending on the ways in which the tool is used. The vibration level may increase above the level stated

When assessing vibration exposure to determine safety measures required by 2002/44/EC to protect persons regularly using power tools in employment, an estimation of vibration exposure should consider, the actual conditions of use and the way the tool is used, including taking account of all parts of the operating cycle such as the times when the tool is switched off and when it is running idle in addition to the trigger time.

Markings on Tool

The following pictograms are shown on the tool:



Read instruction manual before use.



Wear ear protection.



Wear eye protection.



Do not expose the tool to rain or high humidity or leave outdoors while it is raining.



Switch the tool off. Before performing any maintenance on the tool, remove the battery from the tool.



Keep people and animals at least 6 m away from the work area.



Keep bystanders away.



Directive 2000/14/EC guaranteed sound power.

DATE CODE POSITION (FIG. 12)

The date code (l), which also includes the year of manufacture, is printed into the housing.

Example:

2015 XX XX

Year of Manufacture

Important Safety Instructions for All Battery Chargers

SAVE THESE INSTRUCTIONS: *This manual contains important safety and operating instructions for compatible battery chargers (refer to* ***Technical Data****).*

- *Before using charger, read all instructions and cautionary markings on charger, battery pack, and product using battery pack.*

WARNING: *Shock hazard. Do not allow any liquid to get inside charger. Electric shock may result.*

WARNING: *We recommend the use of a residual current device with a residual current rating of 30mA or less.*

CAUTION: *Burn hazard. To reduce the risk of injury, charge only DEWALT rechargeable batteries. Other types of batteries may burst causing personal injury and damage.*

CAUTION: *Children should be supervised to ensure that they do not play with the appliance.*

NOTICE: *Under certain conditions, with the charger plugged into the power supply, the exposed charging contacts inside the charger can be shorted by foreign material. Foreign materials of a conductive nature such as, but not limited to, steel wool, aluminum foil or any buildup of metallic particles should be kept away from charger cavities. Always unplug the charger from the power supply when there is no battery pack in the cavity. Unplug charger before attempting to clean*

- ***DO NOT attempt to charge the battery pack with any chargers other than the ones in this manual.*** *The charger and battery pack are specifically designed to work together.*
- ***These chargers are not intended for any uses other than charging DEWALT rechargeable batteries.*** *Any other uses may result in risk of fire, electric shock or electrocution.*
- ***Do not expose charger to rain or snow.***
- ***Pull by plug rather than cord when disconnecting charger.*** *This will reduce risk of damage to electric plug and cord.*
- ***Make sure that cord is located so that it will not be stepped on, tripped over, or otherwise subjected to damage or stress.***
- ***Do not use an extension cord unless it is absolutely necessary.*** *Use of improper extension cord could result in risk of fire, electric shock, or electrocution.*
- ***Do not place any object on top of charger or place the charger on a soft surface that might block the ventilation slots and result in excessive internal heat.*** *Place the charger in a position away from any heat source. The charger is ventilated through slots in the top and the bottom of the housing.*
- ***Do not operate charger with damaged cord or plug*** *— have them replaced immediately.*
- ***Do not operate charger if it has received a sharp blow, been dropped, or otherwise damaged in any way.*** *Take it to an authorised service centre.*
- ***Do not disassemble charger; take it to an authorised service centre when service or repair is required.*** *Incorrect reassembly may result in a risk of electric shock, electrocution or fire.*
- *In case of damaged power supply cord the supply cord must be replaced immediately by the manufacturer, its service agent or similar qualified person to prevent any hazard.*
- ***Disconnect the charger from the outlet before attempting any cleaning. This will reduce the risk of electric shock.*** *Removing the battery pack will not reduce this risk.*
- ***NEVER*** *attempt to connect 2 chargers together.*
- ***The charger is designed to operate on standard 230V household electrical power. Do not attempt to use it on any other voltage.*** *This does not apply to the vehicular charger.*

SAVE THESE INSTRUCTIONS

Chargers

The DCB115 charger accepts 18 V Li-Ion DCB180, DCB181, DCB182, DCB183, DCB184, and DCB185 battery packs.

DEWALT chargers require no adjustment and are designed to be as easy as possible to operate.

Charging Procedure (fig. 2)

1. Plug the charger into an appropriate outlet before inserting battery pack.
2. Insert the battery pack (i) into the charger. The red (charging) light will blink continuously indicating that the charging process has started.
3. The completion of charge will be indicated by the red light remaining ON continuously. The pack is fully charged and may be used at this time or left in the charger.

NOTE: To ensure maximum performance and life of Li-Ion batteries, charge the battery pack fully before first use.

Charging Process

Refer to the table below for the charge status of the battery pack.

Charge indicators: DCB115		
charging	— — — —	
fully charged	———	
hot/cold pack delay*	— • — • — •	

The red light will continue to blink, but a yellow indicator light will be illuminated during this operation. Once the battery has reached an appropriate temperature, the yellow light will turn off and the charger will resume the charging procedure.

The compatible charger(s) will not charge a faulty battery pack. The charger will indicate faulty battery by refusing to light or by displaying problem pack or charger blink pattern.

NOTE: This could also mean a problem with a charger.

If the charger indicates a problem, take the charger and battery pack to be tested at an authorised service centre.

HOT/COLD PACK DELAY

When the charger detects a battery that is too hot or too cold, it automatically starts a Hot/Cold Pack Delay, suspending charging until the battery has reached an appropriate temperature. The charger then automatically switches to the pack charging mode. This feature ensures maximum battery life.

A cold battery pack will charge at about half the rate of a warm battery pack. The battery pack will charge at that slower rate throughout the entire charging cycle and will not return to maximum charge rate even if the battery warms.

LITHIUM ION BATTERY PACKS ONLY

XR Li-Ion tools are designed with an Electronic Protection System that will protect the battery against overloading, overheating or deep discharge.

The tool will automatically turn off if the Electronic Protection System engages. If this occurs, place the Li-Ion battery on the charger until it is fully charged.

Important Safety Instructions for All Battery Packs

When ordering replacement battery packs, be sure to include catalog number and voltage.

The battery pack is not fully charged out of the carton. Before using the battery pack and charger, read the safety instructions below. Then follow charging procedures outlined.

READ ALL INSTRUCTIONS

- ***Do not charge or use battery in explosive atmospheres, such as in the presence of flammable liquids, gases or dust.*** *Inserting or removing the battery from the charger may ignite the dust or fumes.*
- ***Never force battery pack into charger. Do not modify battery pack in any way to fit into a non-compatible charger as battery pack may rupture causing serious personal injury.***
- *Charge the battery packs only in DEWALT chargers.*
- ***DO NOT*** *splash or immerse in water or other liquids.*
- ***Do not store or use the tool and battery pack in locations where the temperature may reach or exceed 40 ˚C (105 ˚F) (such as outside sheds or metal buildings in summer).***

WARNING: *Never attempt to open the battery pack for any reason. If battery pack case is cracked or damaged, do not insert into charger. Do not crush, drop or damage battery pack. Do not use a battery pack or charger that has received a sharp blow, been dropped, run over or damaged in any way (i.e., pierced with a nail, hit with a hammer, stepped on). Electric shock or electrocution may result. Damaged battery packs should be returned to service centre for recycling.*

CAUTION: When not in use, place tool on its side on a stable surface where it will not cause a tripping or falling hazard. *Some tools with large battery packs will stand upright on the battery pack but may be easily knocked over.*

SPECIFIC SAFETY INSTRUCTIONS FOR LITHIUM ION (LI-ION)

- ***Do not incinerate the battery pack even if it is severely damaged or is completely worn out.*** *The battery pack can explode in a fire. Toxic fumes and materials are created when lithium ion battery packs are burned.*
- ***If battery contents come into contact with the skin, immediately wash area with mild soap and water.*** *If battery liquid gets into the eye, rinse water over the open eye for 15 minutes or until irritation ceases. If medical attention is needed, the battery electrolyte is composed of a mixture of liquid organic carbonates and lithium salts.*
- ***Contents of opened battery cells may cause respiratory irritation.*** *Provide fresh air. If symptoms persists, seek medical attention.*

WARNING: *Burn hazard. Battery liquid may be flammable if exposed to spark or flame.*

Transportation

DEWALT batteries comply with all applicable shipping regulations as prescribed by industry and legal standards which include UN Recommendations on the Transport of Dangerous Goods; International Air Transport Association (IATA) Dangerous Goods Regulations, International Maritime Dangerous Goods (IMDG) Regulations, and the European Agreement Concerning The International Carriage of Dangerous Goods by Road (ADR). Lithium-ion cells and batteries have been tested to section 38.3 of the UN Recommendations on the Transport of Dangerous Goods Manual of Tests and Criteria.

In most instances, shipping a DEWALT battery pack will be excepted from being classified as a fully regulated Class 9 Hazardous material. In general, the two instances that require shipping Class 9 are:

1. Air shipping more than two DEWALT lithium-ion battery packs when the package contains only battery packs (no tools), and
2. Any shipment containing a lithium-ion battery with an energy rating greater than 100 watt hours (Wh). All lithium-ion batteries have the watt hour rating marked on the pack.

Regardless of whether a shipment is considered excepted or fully regulated, it is the shipper's responsibility to consult the latest regulations for packaging, labeling/marking and documentation requirements.

Transporting batteries can possibly cause fire if the battery terminals inadvertently come in contact with conductive materials. When transporting batteries, make sure that the battery terminals are protected and well insulated from materials that could contact them and cause a short circuit.

The information provided in this section of the manual is provided in good faith and believed to be accurate at the time the document was created. However, no warranty, expressed or implied, is given. It is the buyer's responsibility to ensure that its activities comply with the applicable regulations.

Battery Pack

BATTERY TYPE

The DCM563 operates on an 18 volt battery pack.

The DCB180, DCB181, DCB182, DCB183, DCB184, or DCB185 battery packs may be used. Refer to ***Technical Data*** for more information.

Storage Recommendations

1. The best storage place is one that is cool and dry away from direct sunlight and excess heat or cold. For optimum battery performance and life, store battery packs at room temperature when not in use.
2. For long storage, it is recommended to store a fully charged battery pack in a cool, dry place out of the charger for optimal results.

NOTE: Battery packs should not be stored completely depleted of charge. The battery pack will need to be recharged before use.

Labels on Charger and Battery Pack

In addition to the pictographs used in this manual, the labels on the charger and the battery pack may show the following pictographs:


Read instruction manual before use.


See ***Technical Data*** for charging time.


Battery charging.


Battery charged.


Battery defective.


Hot/cold pack delay.


Do not probe with conductive objects.


Do not charge damaged battery packs.


Do not expose to water.


Have defective cords replaced immediately.



Charge only between 4 ℃ and 40 ℃.


Only for indoor use.


Discard the battery pack with due care for the environment.



Charge DEWALT battery packs only with designated DEWALT chargers. Charging battery packs other than the designated DEWALT batteries with a DEWALT charger may make them burst or lead to other dangerous situations.


Do not incinerate the battery pack.

Package Contents

The package contains:

1 Hedge Trimmer

1 Battery

1 Instruction manual

- *Check for damage to the too/l, parts or accessories which may have occurred during transport.*
- *Take the time to thoroughly read and understand this manual prior to operation.*

Description (fig. 1)

WARNING: *Never modify the power tool or any part of it. Damage or personal injury could result.*

a. Trigger switch
b. Lock-off switch
c. Switch handle
d. Blade guard
e. Bail handle
f. Blade
g. Sheath
h. Battery housing
i. Battery pack
j. Battery release button

INTENDED USE

Your *hedge trimmer* has been designed for professional *trimming* applications.

DO NOT use under wet conditions or in the presence of flammable liquids or gases.

DO NOT let children come into contact with the tool. Supervision is required when inexperienced operators use this tool.

- **Young children and the infirm.** This appliance is not intended for use by young children or infirm persons without supervision.
- This product is not intended for use by persons (including children) suffering from diminished physical, sensory or mental abilities; lack of experience, knowledge or skills unless they are supervised by a person responsible for their safety. Children should never be left alone with this product.

Electrical Safety

The electric motor has been designed for one voltage only. Always check that the battery pack voltage corresponds to the voltage on the rating plate. Also make sure that the voltage of your charger corresponds to that of your mains.

Your DEWALT charger is double insulated in accordance with EN 60335; therefore no earth wire is required.

If the supply cord is damaged, it must be replaced by a specially prepared cord available through the DEWALT service organisation.

Mains Plug Replacement (U.K. & Ireland Only)

If a new mains plug needs to be fitted:

- *Safely dispose of the old plug.*
- *Connect the brown lead to the live terminal in the plug.*
- *Connect the blue lead to the neutral terminal.*

WARNING: *No connection is to be made to the earth terminal.*

Follow the fitting instructions supplied with good quality plugs. Recommended fuse: 3 A.

Using an Extension Cable

An extension cord should not be used unless absolutely necessary. Use an approved extension cable suitable for the power input of your charger (see ***Technical Data***). The minimum conductor size is 1 mm^2; the maximum length is 30 m.

When using a cable reel, always unwind the cable completely.

ASSEMBLY AND ADJUSTMENTS

WARNING: To reduce the risk of serious personal injury, turn tool off and disconnect battery pack before making any adjustments or removing/installing attachments or accessories. *An accidental start-up can cause injury.*

WARNING: *Use only DEWALT battery packs and chargers.*

Inserting and Removing the Battery Pack from the Tool (fig. 3-4)

NOTE: Make sure your battery pack (i) is fully charged.

TO INSTALL THE BATTERY PACK INTO THE TOOL HANDLE

1. Align the battery pack (i) with the rails inside the tool's battery housing (h).
2. Slide it into the hedge trimmer until the battery pack is firmly seated in the tool and ensure that

TO REMOVE THE BATTERY PACK FROM THE TOOL

1. Press the release button (j) and firmly pull the battery pack out of the tool.
2. Insert battery pack into the charger as described in the charger section of this manual.

FUEL GAUGE BATTERY PACKS (FIG. 5)

Some DEWALT battery packs include a fuel gauge which consists of three green LED lights that indicate the level of charge remaining in the battery pack.

To actuate the fuel gauge, press and hold the fuel gauge button (k). A combination of the three green LED lights will illuminate designating the level of charge left. When the level of charge in the battery is below the usable limit, the fuel gauge will not illuminate and the battery will need to be recharged.

NOTE: The fuel gauge is only an indication of the charge left on the battery pack. It does not indicate tool functionality and is subject to variation based on product components, temperature and end-user application.

OPERATION

Instructions for Use

WARNING: *Always observe the safety instructions and applicable regulations.*

WARNING: To reduce the risk of serious personal injury, turn tool off and disconnect battery pack before making any adjustments or removing/installing attachments or accessories. *An accidental start-up can cause injury.*

Proper Hand Position (fig. 6)

WARNING: *To reduce the risk of serious personal injury,* ***ALWAYS*** *use proper hand position as shown.*

WARNING: *To reduce the risk of serious personal injury,* ***ALWAYS*** *hold securely in anticipation of a sudden reaction.*

Proper hand position requires one hand on the switch handle (c), with the other hand on the bail handle (e).

WARNING: *Always remove the battery when:*

Switching On (fig. 7)

1. Squeeze and hold the bail handle (e) with one hand so that the front part of the bail handle is pulled back into the body of the bail handle.
2. Push the lock off switch (b) forward and squeeze the trigger switch (a). Once the unit is running, you may release the lock off switch.

In order to keep the unit running you must continue to squeeze the trigger. To turn the unit off, release the trigger.

WARNING: Never attempt to lock a switch in the ON position.

WARNING: Do not cut stems greater than 3/4 inch (19 mm). Use the trimmer only for cutting normal shrubbery around houses and buildings.

Trimming Instructions

WORKING POSITION (FIG. 6)

Maintain proper footing and balance and do not overreach. Wear safety goggles, non-skid footwear when trimming. Hold the unit firmly in both hands and turn the unit on. Always hold the trimmer as shown in Figure 6, with one hand on the switch handle (c) and one hand on the bail handle (e). Never hold the unit by the blade guard (d).

TRIMMING NEW GROWTH (FIG. 8)

Using a wide, sweeping motion, feeding the blade teeth through the twigs, is most effective. A slight downward tilt of the blade in the direction of motion gives the best cutting.

LEVEL HEDGES (FIG. 9)

To obtain exceptionally level hedges a piece of string can be stretched along the length of the hedge as a guide.

SIDE TRIMMING HEDGES (FIG. 10)

Orient the trimmer as shown and begin at the bottom and sweep up.

DANGER: KEEP HANDS AWAY FROM BLADES.

WARNING: To guard against injury, observe the following:

- *READ INSTRUCTION MANUAL BEFORE USING. SAVE INSTRUCTION MANUAL.*
- *Check the hedge for foreign objects such as wires or fences before each use.*
- *KEEP HANDS ON HANDLES. DON'T OVERREACH.*
- *DO NOT USE UNDER WET CONDITIONS.*

CAUTION: *BLADE MAY COAST AFTER TURN OFF*

MAINTENANCE

Your DEWALT power tool has been designed to operate over a long period of time with a minimum of maintenance. Continuous satisfactory operation depends upon proper tool care and regular cleaning.

WARNING: To reduce the risk of serious personal injury, turn tool off and disconnect battery pack before making any adjustments or removing/installing attachments or accessories. *An accidental start-up can cause injury.*

The charger and battery pack are not serviceable.



Lubrication (Fig.11)

1. After use, carefully clean the blades with a resin solvent.
2. After cleaning, apply a light film of lubrication to the exposed blade.
3. Turn the trimmer vertical with the blades toward the ground and run the trimmer for a few seconds to fully disperse the lubrication.
4. Slide the sheath (g) over the blade until it snaps into place as shown in Figure 11.



Cleaning

WARNING: *Blow dirt and dust out of the main housing with dry air as often as dirt is seen collecting in and around the air vents. Wear approved eye protection and approved dust mask when performing this procedure.*

WARNING: *Never use solvents or other harsh chemicals for cleaning the non-metallic parts of the tool. These chemicals may weaken the materials used in these parts. Use a cloth dampened only with water and mild soap. Never let any liquid get inside the tool; never immerse any part of the tool into a liquid.*

CHARGER CLEANING INSTRUCTIONS

WARNING: *Shock hazard. Disconnect the charger from the AC outlet before cleaning. Dirt and grease may be removed from the exterior of the charger using a cloth or soft non-metallic brush. Do not use water or any cleaning solutions.*

Optional Accessories

WARNING: *Since accessories, other than those offered by DEWALT, have not been tested with this product, use of such accessories with this tool could be hazardous. To reduce the risk of injury, only DEWALT recommended accessories should be used with this product.*

Consult your dealer for further information on the appropriate accessories.

Protecting the Environment



Separate collection. Products and batteries marked with this symbol must not be disposed of with normal household waste.

Products and batteries contain materials that can be recovered or recycled reducing the demand for raw materials. Please recycle electrical products and batteries according to local provisions. Further information is available at **www.2helpU.com**.



Rechargeable Battery Pack

This long life battery pack must be recharged when it fails to produce sufficient power on jobs which were easily done before. At the end of its technical life, discard it with due care for our environment:

- Run the battery pack down completely, then remove it from the tool.
- Li-Ion cells are recyclable. Take them to your dealer or a local recycling station. The collected battery packs will be recycled or disposed of properly.

Belgique et Luxembourg België en Luxemburg	DEWALT - Belgium BVBA Egide Walschaertsstraat 16 2800 Mechelen	Tel: NL 32 15 47 37 63 Tel: FR 32 15 47 37 64 Fax: 32 15 47 37 99	www.dewalt.be enduser.BE@SBDinc.com
Danmark	DEWALT Roskildevej 22 2620 Albertslund	Tel: 70 20 15 10 Fax: 70 22 49 10	www.dewalt.dk kundeservice.dk@sbdinc.com
Deutschland	DEWALT Richard Klinger Str. 11 65510 Idstein	Tel: 06126-21-1 Fax: 06126-21-2770	www.dewalt.de infodwge@sbdinc.com
Ελλάς	DEWALT (Ελλάς) A.E. ΕΔΡΑ-ΓΡΑΦΕΙΑ : Στράβωνος 7 & Λ. Βουλιαγμένης, Γλυφάδα 166 74, Αθήνα SERVICE : Ημερος Τόπος 2 (Χάνι Αδάμ) – 193 00 Ασπρόπυργος	Τηλ: 00302108981616 Φαξ: 00302108983570	www.dewalt.gr Greece.Service@sbdinc.com
España	DEWALT Ibérica, S.C.A. Parc de Negocios "Mas Blau" Edificio Muntadas, c/Bergadá, 1, Of. A6 08820 El Prat de Llobregat (Barcelona)	Tel: 934 797 400 Fax: 934 797 419	www.dewalt.es respuesta.postventa@sbdinc.com
France	DEWALT 5, allée des Hêtres BP 30084, 69579 Limonest Cedex	Tel: 04 72 20 39 20 Fax: 04 72 20 39 00	www.dewalt.fr scufr@sbdinc.com
Schweiz Suisse Svizzera	DEWALT In der Luberzen 42 8902 Urdorf	Tel: 044 - 755 60 70 Fax: 044 - 730 70 67	www.dewalt.ch service@rofoag.ch
Ireland	DEWALT Calpe House Rock Hill Black Rock, Co. Dublin	Tel: 00353-2781800 Fax: 00353-2781811	www.dewalt.ie
Italia	DEWALT via Energypark 20871 Vimercate (MB), IT	Tel: 800-014353 39 039 9590200 Fax: 39 039 9590313	www.dewalt.it
Nederlands	DEWALT Netherlands BV Holtum Noordweg 35 6121 RE BORN, Postbus 83, 6120 AB BORN	Tel: 31 164 283 063 Fax: 31 164 283 200	www.dewalt.nl
Norge	DEWALT Postboks 4613, Nydalen 0405 Oslo	Tel: 45 25 13 00 Fax: 45 25 08 00	www.dewalt.no kundeservice.no@sbdinc.com
Österreich	DEWALT Werkzeug Vertriebsges m.b.H Oberlaaerstrasse 248, A-1230 Wien	Tel: 01 - 66116 - 0 Fax: 01 - 66116 - 614	www.dewalt.at service.austria@sbdinc.com
Portugal	DEWALT Limited, SARL Centro de Escritórios de Sintra Avenida Almirante Gago Coutinho, 132/134, Edifício 14 2710-418 Sintra	Tel: 214 66 75 00 Fax: 214 66 75 80	www.dewalt.pt resposta.posvenda@sbdinc.com
Suomi	DEWALT PL 47 00521 Helsinki	Puh: 010 400 4333 Faksi: 0800 411 340	www.dewalt.fi asiakaspalvelu.fi@sbdinc.com
Sverige	DEWALT Box 94 431 22 Mölndal	Tel: 031 68 61 60 Fax: 031 68 60 08	www.dewalt.se kundservice.se@sbdinc.com
Türkiye	KALE Hırdavat ve Makina A.Ş. Defterdar Mah. Savaklar Cad. No:15 Edirnekapı / Eyüp / İSTANBUL 34050 TÜRKİYE	Tel: 0212 533 52 55 Faks: 0212 533 10 05	www.dewalt.com.tr
United Kingdom	DEWALT, 210 Bath Road; Slough, Berks SL1 3YD	Tel: 01753-567055 Fax: 01753-572112	www.dewalt.co.uk emeaservice@sbdinc.com
Australia	DEWALT 82 Taryn Drive, Epping VIC 3076 Australia	Tel: Aust 1800 338 002 Tel: NZ 0800 339 258	www.dewalt.com.au www.dewalt.co.nz
Middle East Africa	DEWALT P.O. Box - 17164, Jebel Ali Free Zone (South), Dubai, UAE	Tel: 971 4 812 7400 Fax: 971 4 2822765	www.dewalt.ae Service.MEA@sbdinc.com