English ***(original instructions)*** 4

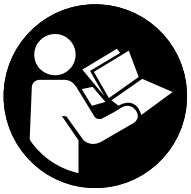

DCD789
DCD794
DCD799

www.DEWALT.com

Fig. A

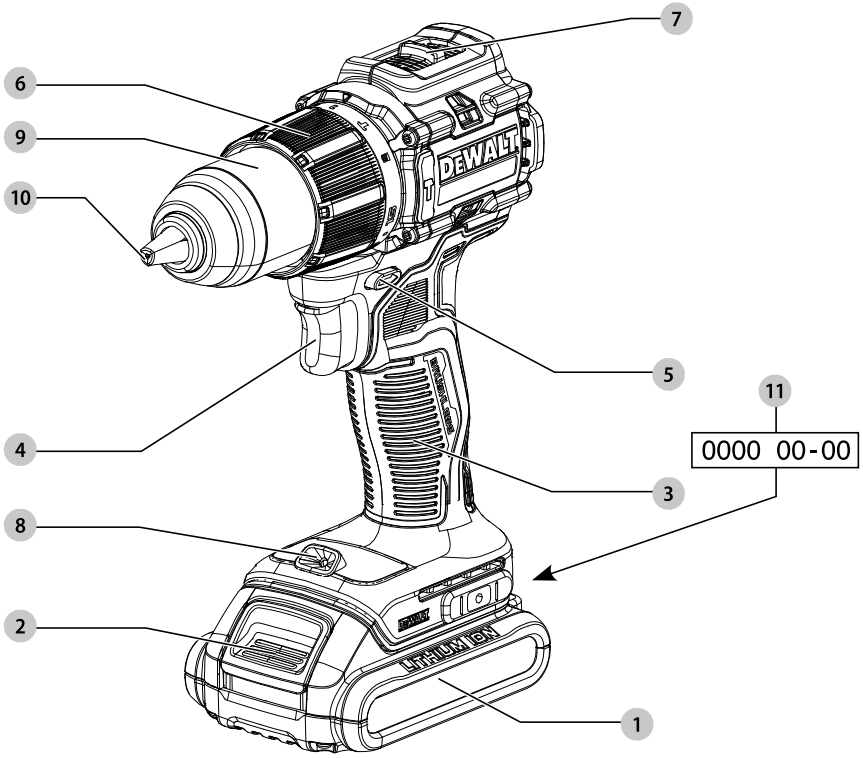

Fig. B

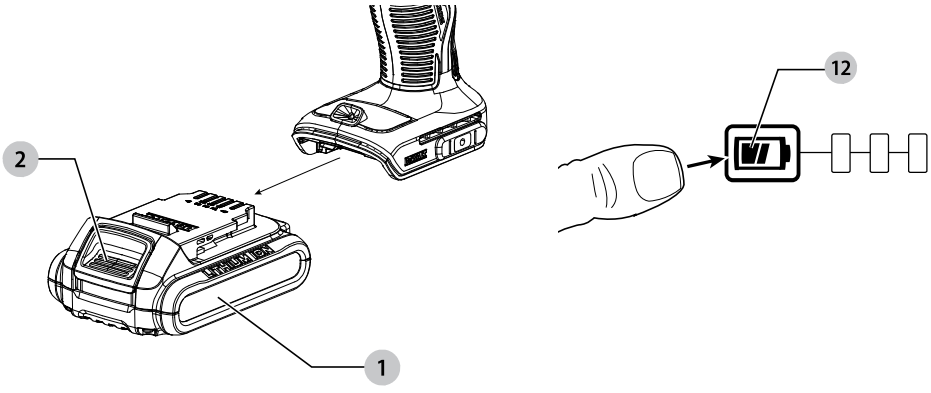

Copyright DEWALT

Fig. C

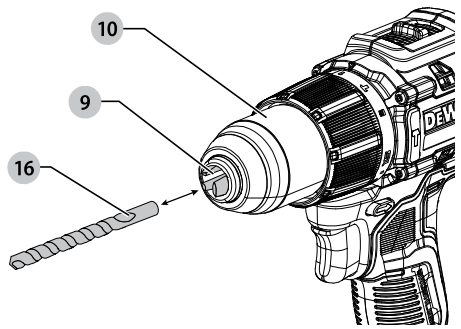

Fig. D

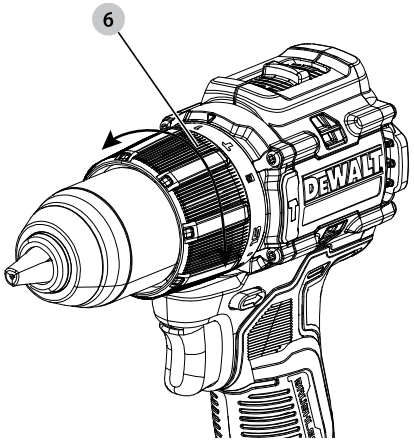

Fig. E

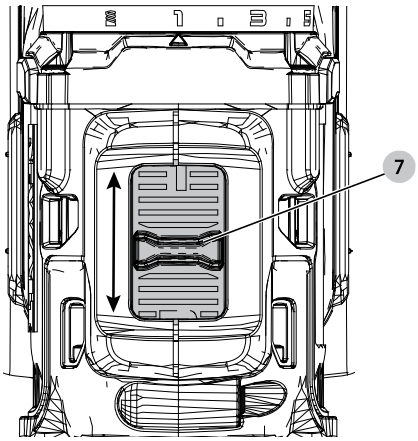

Fig. F

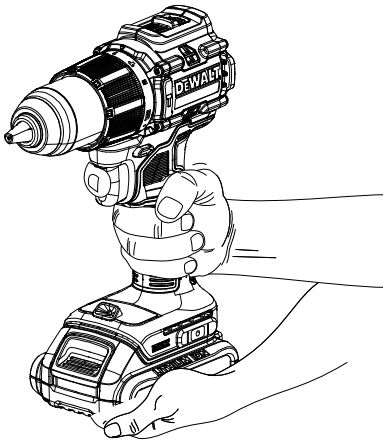

Fig. G

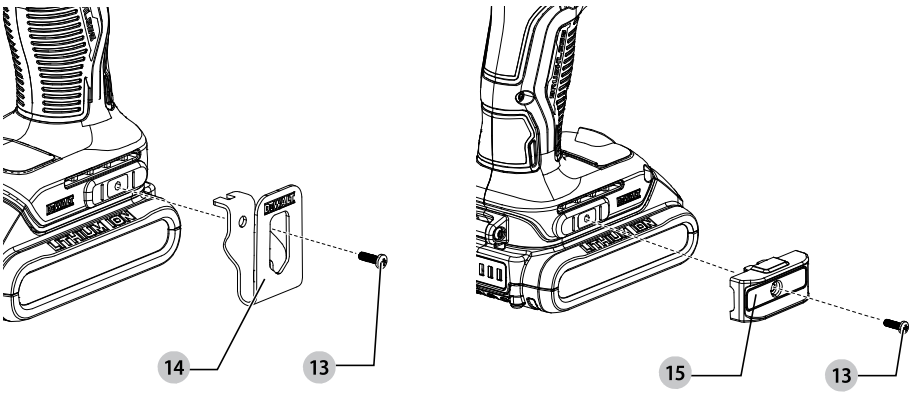

18V COMPACT 13 MM DRILL/DRIVER/HAMMER DRILL
DCD789, DCD794, DCD799

WARNING: Read all safety warnings, instructions, illustrations, and specifications in this manual, including the battery and charger sections provided in an original tool manual or the separate Batteries and Chargers manual. *Manuals can be obtained by contacting Customer Service (refer to the back page of this manual).*

Technical Data

		DCD789	DCD794	DCD799
Voltage	V_{DC}	18	18	18
Type		10	10	10
Battery type		Li-Ion	Li-Ion	Li-Ion
No load speed		Drill, Driver/ Hammer		Drill, Driver/ Hammer
1st gear	min^{-1}	0–450	0–450	0–450
2nd gear		0–1650	0–1650	0–1650
Impact rate				
1st gear	min^{-1}	0–7650	–	0–7650
2nd gear		0–28050	–	0–28050
Max. torque (hard/soft)				
hard	Nm	68	74	74
soft	Nm	26	26	26
Chuck capacity	mm	1.5–13	1.5–13	1.5–13
Maximum drilling capacity				
Wood	mm	30	30	30
Metal		13	13	13
Masonry		13	–	13
Weight (without battery pack)	kg	1.17	1.12	1.17
Noise values and vibration values (triax vector sum) according to EN62841-2-1:				
L_{PA} (emission sound pressure level)	dB(A)	92	76	92
L_{WA} (sound power level)	dB(A)	100	84	100
K (uncertainty for the given sound level)	dB(A)	3	5	3
Drilling into metal				
Vibration emission value $a_{h,D}$ =	m/s^2	3.2	< 2.5	3.2
Uncertainty K =	m/s^2	1.5	1.5	1.5
Impact drilling				
Vibration emission value $a_{h,ID}$ =	m/s^2	12	–	12
Uncertainty K =	m/s^2	1.5	–	1.5

The vibration and/or noise emission level given in this information sheet has been measured in accordance with a standardised test given in EN62841 and may be used to compare one tool with another. It may be used for a preliminary assessment of exposure.

⚠ ***WARNING:*** *The declared vibration and/or noise emission level represents the main applications of the tool. However, if the tool is used for different applications, with different accessories or is poorly maintained, the vibration and/or noise emission may differ. This may significantly increase the exposure level over the total working period.*

An estimation of the level of exposure to vibration and/or noise should also take into account the times when the tool is switched off or when it is running but not actually doing the job. This may significantly reduce the exposure level over the total working period.

Identify additional safety measures to protect the operator from the effects of vibration and/or noise such as: maintain the tool and the accessories, keep the hands warm (relevant for vibration), organisation of work patterns.

EC-Declaration of Conformity

Machinery Directive

CE

Drill/Driver/Impact Drill
DCD789, DCD794, DCD799

DEWALT declares that these products described under ***Technical Data*** are in compliance with: 2006/42/EC, EN62841-1:2015+A11:2022, EN 62841-2-1:2018 + A11:2019 + A12:2022 + A1:2022.

These products also comply with Directive 2014/30/EU and 2011/65/EU. For more information, please contact DEWALT at the following address or refer to the back of the manual.

The undersigned is responsible for compilation of the technical file and makes this declaration on behalf of DEWALT.

Markus Rompel
Vice-President Engineering, PTE-Europe
DEWALT, Richard-Klinger-Straße 11,
65510, Idstein, Germany
31.10.2024

WARNING: *To reduce the risk of injury, read the instruction manual.*

Definitions: Safety Guidelines

The definitions below describe the level of severity for each signal word. Please read the manual and pay attention to these symbols.

⚠ ***DANGER:*** *Indicates an imminently hazardous situation which, if not avoided,* ***will*** *result in* ***death or serious injury****.*

⚠ ***WARNING:*** *Indicates a potentially hazardous situation which, if not avoided,* ***could*** *result in* ***death or serious injury****.*

⚠ ***CAUTION:*** *Indicates a potentially hazardous situation which, if not avoided,* ***may*** *result in* ***minor or moderate injury****.*

NOTICE: *Indicates a practice* ***not related to personal injury*** *which, if not avoided,* ***may*** *result in* ***property damage****.*

⚠ *Denotes risk of electric shock.*

⚠ *Denotes risk of fire.*

GENERAL POWER TOOL SAFETY WARNINGS

⚠ ***WARNING: Read all safety warnings, instructions, illustrations and specifications provided with this power tool.*** *Failure to follow all instructions listed below may result in electric shock, fire and/or serious injury.*

SAVE ALL WARNINGS AND INSTRUCTIONS FOR FUTURE REFERENCE

The term "power tool" in the warnings refers to your mains-operated (corded) power tool or battery-operated (cordless) power tool.

1) Work Area Safety

a) ***Keep work area clean and well lit.*** *Cluttered or dark areas invite accidents.*

b) ***Do not operate power tools in explosive atmospheres, such as in the presence of flammable liquids, gases or dust.*** *Power tools create sparks which may ignite the dust or fumes.*

c) ***Keep children and bystanders away while operating a power tool.*** *Distractions can cause you to lose control.*

2) Electrical Safety

a) ***Power tool plugs must match the outlet. Never modify the plug in any way. Do not use any adapter plugs with earthed (grounded) power tools.*** *Unmodified plugs and matching outlets will reduce risk of electric shock.*

b) ***Avoid body contact with earthed or grounded surfaces, such as pipes, radiators, ranges and refrigerators.*** *There is an increased risk of electric shock if your body is earthed or grounded.*

c) ***Do not expose power tools to rain or wet conditions.*** *Water entering a power tool will increase the risk of electric shock.*

d) ***Do not abuse the cord. Never use the cord for carrying, pulling or unplugging the power tool. Keep cord away from heat, oil, sharp edges or moving parts.*** *Damaged or entangled cords increase the risk of electric shock.*

e) ***When operating a power tool outdoors, use an extension cord suitable for outdoor use.*** *Use of a cord suitable for outdoor use reduces the risk of electric shock.*

f) ***If operating a power tool in a damp location is unavoidable, use a residual current device (RCD) protected supply.*** *Use of an RCD reduces the risk of electric shock.*

3) Personal Safety

a) ***Stay alert, watch what you are doing and use common sense when operating a power tool. Do not use a power tool while you are tired or under the influence of drugs, alcohol or medication.*** *A moment of inattention while operating power tools may result in serious personal injury.*

b) ***Use personal protective equipment. Always wear eye protection.*** *Protective equipment such as a dust mask, non-skid safety shoes, hard hat or hearing protection used for appropriate conditions will reduce personal injuries.*

c) ***Prevent unintentional starting. Ensure the switch is in the off position before connecting to power source and/or battery pack, picking up or carrying the tool.*** *Carrying power tools with your finger on the switch or energising power tools that have the switch on invites accidents.*

d) ***Remove any adjusting key or wrench before turning the power tool on.*** *A wrench or a key left attached to a rotating part of the power tool may result in personal injury.*

e) ***Do not overreach. Keep proper footing and balance at all times.*** *This enables better control of the power tool in unexpected situations.*

f) ***Dress properly. Do not wear loose clothing or jewellery. Keep your hair and clothing away from moving parts.*** *Loose clothes, jewellery or long hair can be caught in moving parts.*

g) ***If devices are provided for the connection of dust extraction and collection facilities, ensure these are connected and properly used.*** *Use of dust collection can reduce dust-related hazards.*

h) ***Do not let familiarity gained from frequent use of tools allow you to become complacent and ignore tool safety principles.*** *A careless action can cause severe injury within a fraction of a second.*

4) Power Tool Use and Care

a) ***Do not force the power tool. Use the correct power tool for your application.*** *The correct power tool will do the job better and safer at the rate for which it was designed.*

b) ***Do not use the power tool if the switch does not turn it on and off.*** *Any power tool that cannot be controlled with the switch is dangerous and must be repaired.*

c) ***Disconnect the plug from the power source and/or remove the battery pack, if detachable, from the power tool before making any adjustments, changing accessories, or storing power tools.*** *Such preventive safety measures reduce the risk of starting the power tool accidentally.*

d) ***Store idle power tools out of the reach of children and do not allow persons unfamiliar with the power tool or these instructions to operate the power tool.*** *Power tools are dangerous in the hands of untrained users.*

e) ***Maintain power tools and accessories. Check for misalignment or binding of moving parts, breakage of parts and any other condition that may affect the power tool's operation. If damaged, have the power tool repaired before use.*** *Many accidents are caused by poorly maintained power tools.*

f) ***Keep cutting tools sharp and clean.*** *Properly maintained cutting tools with sharp cutting edges are less likely to bind and are easier to control.*

g) ***Use the power tool, accessories and tool bits, etc. in accordance with these instructions, taking into account the working conditions and the work to be performed.*** *Use of the power tool for operations different from those intended could result in a hazardous situation.*

h) ***Keep handles and grasping surfaces dry, clean and free from oil and grease.*** *Slippery handles and grasping surfaces do not allow for safe handling and control of the tool in unexpected situations.*

5) Battery Tool Use and Care

a) ***Recharge only with the charger specified by the manufacturer.*** *A charger that is suitable for one type of battery pack may create a risk of fire when used with another battery pack.*

b) ***Use power tools only with specifically designated battery packs.*** *Use of any other battery packs may create a risk of injury and fire.*

c) ***When battery pack is not in use, keep it away from other metal objects, like paper clips, coins, keys, nails, screws or other small metal objects, that can make a connection from one terminal to another.*** *Shorting the battery terminals together may cause burns or a fire.*

d) ***Under abusive conditions, liquid may be ejected from the battery; avoid contact. If contact accidentally occurs, flush with water. If liquid contacts eyes, additionally seek***

medical help. *Liquid ejected from the battery may cause irritation or burns.*

e) ***Do not use a battery pack or tool that is damaged or modified.*** *Damaged or modified batteries may exhibit unpredictable behaviour resulting in fire, explosion or risk of injury.*

f) ***Do not expose a battery pack or tool to fire or excessive temperature.*** *Exposure to fire or temperature above 130 °C may cause explosion.*

g) ***Follow all charging instructions and do not charge the battery pack or tool outside the temperature range specified in the instructions.*** *Charging improperly or at temperatures outside the specified range may damage the battery and increase the risk of fire.*

6) Service

a) ***Have your power tool serviced by a qualified repair person using only identical replacement parts.*** *This will ensure that the safety of the power tool is maintained.*

b) ***Never service damaged battery packs.*** *Service of battery packs should only be performed by the manufacturer or authorised service providers.*

Drill Safety Warnings

Safety Instructions for All Operations

- ***Wear ear protectors when impact drilling.*** *Exposure to noise can cause hearing loss.*
- ***Use the auxiliary handle(s).*** *Loss of control can cause personal injury.*
- ***Brace the tool properly before use.*** *This tool produces a high output torque and without properly bracing the tool during operation, loss of control may occur resulting in personal injury.*
- ***Hold the power tool by insulated gripping surfaces when performing an operation where the cutting accessory or fasteners may contact hidden wiring.*** *Cutting accessory or fasteners contacting a "live" wire may make exposed metal parts of the power tool "live" and could give the operator an electric shock.*

Safety Instructions When Using Long Drill Bits

- ***Never operate at higher speed than the maximum speed rating of the drill bit.*** *At higher speeds, the bit is likely to bend if allowed to rotate freely without contacting the workpiece, resulting in personal injury.*
- ***Always start drilling at low speed and with the bit tip in contact with the workpiece.*** *At higher speeds, the bit is likely to bend if allowed to rotate freely without contacting the workpiece, resulting in personal injury.*
- ***Apply pressure only in direct line with the bit and do not apply excessive pressure.*** *Bits can bend causing breakage or loss of control, resulting in personal injury.*

Additional Specific Safety Rules for Drills/Drivers/ Impact Drills

- ***Use clamps or other practical way to secure and support the workpiece to a stable platform.*** *Holding the work by hand or against your body is unstable and may lead to loss of control.*
- ***Wear safety goggles or other eye protection.*** *Hammering and drilling operations cause chips to fly. Flying particles can cause permanent eye damage.*
- ***Drill bits and tools get hot during operation.*** *Wear gloves when touching them.*
- ***Do not operate this tool for long periods of time.*** *Vibration caused by hammer action may be harmful to your hands and arms. Use gloves to provide extra cushion and limit exposure by taking frequent rest periods.*
- ***Air vents often cover moving parts and should be avoided.*** *Loose clothes, jewellery or long hair can be caught in moving parts.*

Residual Risks

In spite of the application of the relevant safety regulations and the implementation of safety devices, certain residual risks cannot be avoided. These are:

- *Impairment of hearing.*
- *Risk of personal injury due to flying particles.*
- *Risk of burns due to accessories becoming hot during operation.*
- *Risk of personal injury due to prolonged use.*

Battery Type

These battery packs may be used:

Battery	(kg)	Battery	(kg)
DCB546	1.08	**DCB184/B/G**	0.62
DCB547/G	1.46	**DCB185**	0.35
DCB548	1.46	**DCB187**	0.54
DCB549	2.12	**DCB189**	0.54
DCB181	0.35	**DCBP034/G**	0.32
DCB182	0.61	**DCBP518/G**	0.75
DCB183/B/G	0.40		

Refer to the battery/charger manual for more information.

Markings on Tool

The following pictograms are shown on the tool:


Read instruction manual before use.


Visible radiation. Do not stare into light.

Date Code Position (Fig. A)

The production date code **11** consists of a 4-digit year followed by a 2-digit week and is extended by a 2-digit factory code.

Description (Fig. G)

⚠ ***WARNING:*** *Never modify the power tool or any part of it. Damage or personal injury could result.*

Components

1 Battery pack†
2 Battery pack release button
3 Main handle
4 Variable-speed trigger switch
5 Forward/reverse control/lock-off button
6 Mode selection collar
7 Speed selector
8 Worklight
9 Keyless chuck
10 Chuck sleeve
11 Date code position
12 Fuel gauge button

†Included in some packages.

NOTE: Check for damage to parts or accessories which may have occurred during transport.

Intended Use

This drill/driver or hammerdrill/driver are designed for professional drilling, screwdriving and the DCD789 and DCD799 also for percusion drilling applications.

DO NOT use under wet conditions or in the presence of flammable liquids or gases.

These drills/drivers/hammerdrills are professional power tools.

DO NOT let children come into contact with the tool. Supervision is required when inexperienced operators use this tool.

- **Young children and the infirm.** This appliance is not intended for use by young children or infirm persons without supervision.
- This product is not intended for use by persons (including children) suffering from diminished physical, sensory or mental abilities; lack of experience, knowledge or skills unless they are supervised by a person responsible for their safety. Children should never be left alone with this product.

ASSEMBLY AND ADJUSTMENTS

⚠ ***WARNING: To reduce the risk of serious personal injury, turn tool off and disconnect battery pack before making any adjustments or removing/installing attachments or accessories.*** *An accidental start-up can cause injury.*

⚠ ***WARNING:*** *Use only DEWALT batteries and chargers.*

Inserting and Removing the Battery Pack from the Tool (Fig. B)

NOTE: Make sure your battery pack 1 is fully charged.

To Install the Battery Pack into the Tool Handle

1. Align the battery pack with the rails inside the tool's handle (Fig. B).
2. Slide it into the handle until the battery pack is firmly seated in the tool and ensure that you hear the lock snap into place.

To Remove the Battery Pack from the Tool

1. Press the battery release button 2 and firmly pull the battery pack out of the tool handle.
2. Insert battery pack into the charger.

Fuel Gauge Battery Packs (Fig. B)

Some DEWALT battery packs include a fuel gauge 12, which consists of three green LED lights that indicate the level of charge remaining in the battery pack.

To actuate the fuel gauge, press and hold the fuel gauge button. A combination of the three green LED lights will illuminate, designating the level of charge left. When the level of charge in the battery is below the usable limit, the fuel gauge will not illuminate and the battery will need to be recharged.

NOTE: The fuel gauge is only an indication of the charge left on the battery pack. It does not indicate tool functionality and is subject to variation based on product components, temperature and end-user application.

Belt Hook and Bit Clip (Fig. G)

(Optional Accessory)

⚠ ***WARNING: To reduce the risk of serious personal injury, ONLY use the tool's belt hook to hang the tool from a work belt. DO NOT*** *use the belt hook for tethering or securing the tool to a person or object during use.* ***DO NOT*** *suspend tool overhead or suspend objects from the belt hook.*

⚠ ***WARNING: To reduce the risk of serious personal injury,*** *ensure the screw holding the belt hook is secure.*

IMPORTANT: When attaching or replacing the belt hook or bit clip, use only the screw 13 that is provided. Be sure to securely tighten the screw.

The belt hook 14 and bit clip 15 can be attached to either side of the tool using only the screw 13 provided, to accommodate left- or right-handed users. If the belt hook or bit clip is not desired at all, they can be removed from the tool.

To move the belt hook or bit clip, remove the screw that holds it in place then reassemble on the opposite side. Be sure to securely tighten the screw.

Installing a Bit or Accessory into a Keyless Chuck (Fig. C)

⚠ ***WARNING:*** *Do not attempt to tighten drill bits (or any other accessory) by gripping the front part of the chuck and turning the tool on. Damage to the chuck and personal injury may result. Always lock off trigger switch and disconnect tool from power source when changing accessories.*

⚠ ***WARNING:*** *Always ensure the bit is secure before starting the tool. A loose bit may eject from tool causing possible personal injury.*

To insert a drill bit 16 or other accessory, follow these steps.

1. Turn tool off and remove battery pack.
2. Grasp the black sleeve of the chuck with one hand and use the other hand to secure the tool. Rotate the sleeve counterclockwise far enough to accept the desired accessory.
3. Insert the accessory about 19 mm into the chuck 9 and tighten securely by grasping and rotating the chuck sleeve 10 clockwise with one hand while holding the tool with the other. When the chuck is nearly tightened you will hear a clicking sound. Tighten the sleeve until the clicks stop and it will not rotate any further. Your tool is equipped with an automatic spindle lock mechanism. This allows you to open and close the chuck with one hand.
4. Be sure to tighten chuck with one hand on the chuck sleeve and one hand holding the tool for maximum tightness.
5. To release the accessory, repeat steps 1 and 2 above.

OPERATION

Instructions for Use

⚠ ***WARNING:*** *Always observe the safety instructions and applicable regulations.*

⚠ ***WARNING: To reduce the risk of serious personal injury, turn tool off and disconnect battery pack before making any adjustments or removing/installing attachments or accessories.*** *An accidental start-up can cause injury.*

Speed Selection (Fig. A, E)

The tool features two speed settings for greater versatility.

NOTE: Do not change speeds when the tool is running. Always allow the tool to come to a complete stop before changing speed.

1. To select speed 1 (high torque setting), turn the tool off and permit it to stop. Slide the speed selector 7 back (away from the chuck).
2. To select speed 2 (high speed setting), turn the tool off and permit it to stop. Slide the speed selector forward (toward the chuck).

3. If the tool does not change speeds, confirm that the speed selection switch is completely engaged in the forward or back position.

Mode Selection (Fig. A, D)

The mode selection collar 6 can be used to select the correct operating mode depending upon the planned application.

To select, rotate the collar until the desired symbol aligns with the arrow.

⚠ ***WARNING:*** *When the mode selection collar is in the drill or hammerdrill positions, the drill will not clutch. The drill may stall if overloaded, causing a sudden twist.*

DCD794	
Symbol	**Mode**
	Drilling
1-15	Screwdriving (higher number = greater torque)

DCD789, DCD799	
Symbol	**Mode**
	Drilling
1-15	Screwdriving (higher number = greater torque)
	Hammerdrilling

Proper Hand Position (Fig. F)

⚠ ***WARNING:*** *To reduce the risk of serious personal injury,* ***ALWAYS*** *use proper hand position as shown.*

⚠ ***WARNING:*** *To reduce the risk of serious personal injury,* ***ALWAYS*** *hold securely in anticipation of a sudden reaction.*

Proper hand position requires one hand on the main handle 3 and the other hand holding the battery pack 1.

Variable Speed Trigger and Forward/Reverse Control Button (Fig. A)

The tool is turned on and off by pulling and releasing the variable speed trigger switch 4. The farther the trigger is depressed, the higher the speed of the tool. Your tool is equipped with a brake. The chuck will stop as soon as the trigger switch is fully released.

A forward/reverse control button 5 determines the rotational direction of the tool and also serves as a lock-off button.

- To select forward rotation (clockwise), release the trigger and depress the forward/reverse control button on the right side of the tool.
- To select reverse (counterclockwise), depress the forward/reverse control button on the left side of the tool.

NOTE: The centre position of the control button locks the tool in the off position. When changing the position of the control button, be sure the trigger is released.

NOTE: Continuous use in variable speed range is not recommended. It may damage the switch and should be avoided.

NOTE: The first time the tool is run after changing the direction of rotation, you may hear a click on start-up. This is normal and does not indicate a problem.

Worklight (Fig. A)

The worklight 8 is activated when the trigger switch 4 is depressed, and will automatically turn off 20 seconds after the trigger switch is released. If the trigger switch remains depressed, the worklight will remain on.

NOTE: The worklight is for lighting the immediate work surface and is not intended to be used as a flashlight.

Performing an Application (Fig. A)

⚠ ***WARNING: To reduce the risk of personal injury, ALWAYS*** *ensure workpiece is anchored or clamped firmly.*

⚠ ***WARNING:*** *Always wait until the motor has come to a complete standstill before changing the direction of rotation.*

Prior to Performing Work

- Set the speed selector 7. Refer to ***Speed Selection***.
- Install the appropriate bit or accessory into the chuck. Refer to accessory installation instructions in this manual.

⚠ ***WARNING:***

- *Do not use this tool to mix or pump easily combustible or explosive fluids (benzine, alcohol, etc.).*
- *Do not mix or stir flammable liquids labeled accordingly.*

Screwdriving

Your tool has a clutch with adjustable torque for driving and removing a wide array of fastener shapes and sizes. The numbers 1–15 on the mode selection collar 6 are used to set a torque range for screwdriving. The higher the number on the collar, the higher the torque and the larger the fastener which can be driven.

1. Turn the mode selection collar 6 to the desired position. Refer to ***Mode Selection.***
2. Pull the trigger switch applying pressure in a straight line with the bit until the fastener is seated at the desired depth in the workpiece.

Recommendations for Screwdriving

- Start with lower torque settings, then advance to higher torque settings to avoid damage to the workpiece or fastener.
- Make some practice runs in scrap or on unseen areas of the workpiece to determine the proper position of the mode selection collar.

Drilling

1. Turn the mode selector 6 to the "drill symbol." Refer to ***Mode Selection***.
2. Place drill bit in contact with the workpiece.

NOTE: Use sharp drill bit only.

3. Pull the trigger switch applying pressure in a straight line with the bit until it reaches the desired depth.

⚠ ***WARNING:*** *Drill may stall if overloaded causing a sudden twist. Always expect the stall. Grip the drill firmly to control the twisting action and avoid injury.*

4. Keep the motor running when pulling the bit back out of a drilled hole to prevent jamming.

Recommendations for Drilling

- When drilling, always apply pressure in a straight line with the bit, but do not push hard enough to stall the motor or deflect the bit.

• **IF THE DRILL STALLS:**

- **RELEASE TRIGGER SWITCH IMMEDIATELY**, remove drill bit from work, and determine cause of stalling.

- **DO NOT DEPRESS TRIGGER SWITCH ON AND OFF IN AN ATTEMPT TO START A STALLED DRILL—THIS CAN DAMAGE THE DRILL.**

- To minimize stalling or breaking through the material, reduce pressure on drill and ease the bit through the last fractional part of the hole.

• Large holes, 8 mm to 13 mm in steel, can be made easier if a pilot hole, 4 mm to 5 mm, is drilled first.

• If drilling thin material or material that is prone to splinter, use a wood "back-up" block to prevent damage to the workpiece.

Hammerdrilling **DCD789, DCD799**

IMPORTANT: Use carbide-tipped or masonry bits rated for percussion drilling only.

1. Turn the mode selector **6** to the "hammer symbol."
2. Pull the trigger, applying just enough pressure on the hammer to keep it from bouncing excessively or "rising" off the bit.

Recommendations for Hammerdrilling

• Too much force will cause slower drilling speeds, overheating, and a lower drilling rate.

• A smooth even flow of material indicates the proper drilling rate.

• Drill straight, keeping the bit at a right angle to the work. Do not exert side pressure on the bit when drillling as this will cause clogging of the bit flutes and a slower drilling speed.

• When drilling deep holes, if the hammer speed starts to drop off, pull the bit partially out of the hole with tool still running to help clear debris from the hole.

MAINTENANCE

Your power tool has been designed to operate over a long period of time with a minimum of maintenance. Continuous satisfactory operation depends upon proper tool care and regular cleaning.

⚠ ***WARNING: To reduce the risk of serious personal injury, turn tool off and disconnect battery pack before making any adjustments or removing/installing attachments or accessories.*** *An accidental start-up can cause injury.*

The charger and battery pack are not serviceable.

Please refer to the back page of this manual for service centre contact information, or visit **www.2helpU.com**.

Lubrication

Your power tool requires no additional lubrication.

Cleaning

⚠ ***WARNING:*** *Electrical shock and mechanical hazard. Remove the battery before cleaning.*

⚠ ***WARNING:*** *To ensure safe and efficient operation, always keep the electrical appliance and the ventilation slots clean.*

⚠ ***WARNING:*** *Never use solvents or other harsh chemicals for cleaning the non-metallic parts of the tool. These chemicals may weaken the materials used in these parts. Use a cloth dampened only with water and mild soap. Never let any liquid get inside the tool; never immerse any part of the tool into a liquid.*

Ventilation slots can be cleaned using a dry, soft non-metallic brush and/or a suitable vacuum cleaner. Do not use water or any cleaning solutions. Wear approved eye protection and an approved dust mask.

Optional Accessories

⚠ ***WARNING:*** *Since accessories, other than those offered by DEWALT, have not been tested with this product, use of such accessories with this tool could be hazardous. To reduce the risk of injury, only DEWALT-recommended accessories should be used with this product.*

Consult your dealer for further information on the appropriate accessories.

Protecting the Environment



Products/batteries are recyclable, but if marked with the crossed-out bin, they must not be disposed of with normal household waste.

Run the batteries down completely and separate them, and separate any light sources from the product if possible. It is the user's responsibility to delete personal data from the product. Then take the waste to an official waste collection center or a participating retailer who will often accept it free of charge. Packaging should be discarded based on the marked material code. Operating and safety instructions should only be discarded once the applicable product is no longer in use.

Please check with your local community/municipality for waste management guidance. For further information, visit **www.2helpU.com** and scan the above QR code.

Australia / New Zealand	Tel: Aust Tel: NZ	1800 338 002 0800 339 258	www.dewalt.com.au www.dewalt.co.nz support@dewalt.au support@dewalt.co.nz
Belgique et Luxembourg België en Luxemburg	Tel: NL Tel: FR	32 15 47 37 63 32 15 47 37 64	www.dewalt.be support@dewalt.be support@dewalt.be.fr
Danmark	Tel:	70 20 15 10	www.dewalt.dk support@dewalt.dk
Deutschland	Tel:	06126-21-0	www.dewalt.de support@dewalt.de
Ελλάς	Τηλ:	00302108981616	www.dewalt.gr support@dewalt.gr
España	Tel:	934 797 400	www.dewalt.es support@dewalt.es
France	Tel:	04 72 20 39 20	www.dewalt.fr support@dewalt.fr
Schweiz, Suisse, Svizzera	Tel:	044 - 755 60 70	www.dewalt.ch support@dewalt.ch.de support@dewalt.ch.fr support@dewalt.ch.it
Ireland	Tel:	00353-2781800	www.dewalt.ie support@dewalt.ie
Italia	Tel:	800-014353 39 039-9590200	www.dewalt.it support@dewalt.it
Nederlands	Tel:	31 164 283 063	www.dewalt.nl support@dewalt.nl
Norge	Tel:	45 25 13 00	www.dewalt.no support@dewalt.no
Österreich	Tel:	01 - 66116 - 0	www.dewalt.at support@dewalt.at
Portugal	Tel:	+351 214667500	www.dewalt.pt support@dewalt.pt
Suomi	Puh:	010 400 4333	www.dewalt.fi support@dewalt.fi
Sverige	Tel:	031 68 61 60	www.dewalt.se support@dewalt.se
Türkiye	Tel:	+90 216 665 2900	tr.dewalt.global support@dewalt.com.tr
United Kingdom	Tel:	(+44) (0)1753 260094	www.dewalt.co.uk support@dewalt.co.uk
Middle East Africa	Tel:	971 4 812 7400	www.dewalt.ae support@dewalt.ae