BOSCH

# GBH 18V-40 C Professional HEAVY DUTY

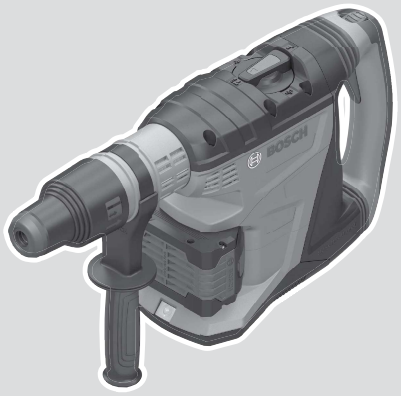

**Robert Bosch Power Tools GmbH**
70538 Stuttgart
GERMANY

**www.bosch-pt.com**

**1 609 92A 88Y** (2022.10) PS / 121

1 609 92A 88Y

**en** Original instructions
**fr** Notice originale
**pt** Manual original
**es** Manual original
**pt** Manual de instruções original
**zh** 正本使用说明书
**zh** 原始使用說明書
**th** หนังสือคู่มือการใช้งานฉบับต้นแบบ
**id** Petunjuk-Petunjuk untuk Penggunaan Orisinal
**vi** Bản gốc hướng dẫn sử dụng
**ar** دليل التشغيل الأصلي
**fa** دفترچه راهنمای اصلی

English ..... Page 5
Français ..... Page 13
Português ..... Página 23
Español ..... Página 33
Português do Brasil ..... Página 43
中文 ..... 页 53
繁體中文 ..... 頁 61
ไทย ..... หน้า 68
Bahasa Indonesia ..... Halaman 79
Tiếng Việt ..... Trang 88
عربي ..... الصفحة 99
فارسی ..... صفحه 109

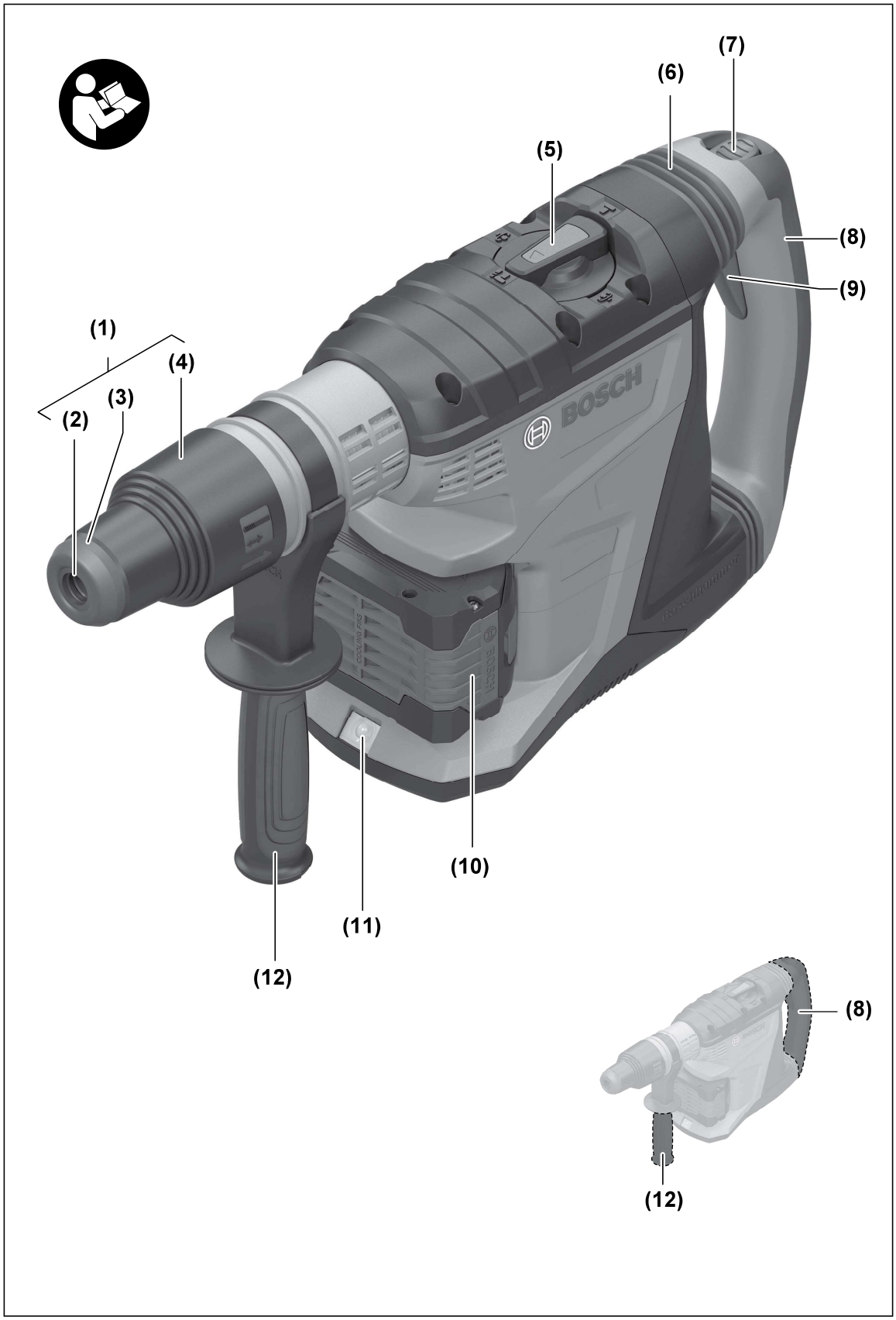
(1)
(2)
(3)
(4)
(5)
(6)
(7)
(8)
(9)
(10)
(11)
(12)
(8)
(12)

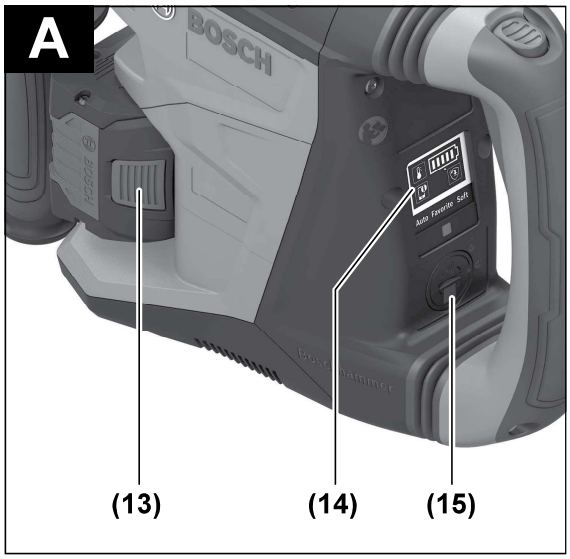
A
BOSCH
(13)
(14)
(15)

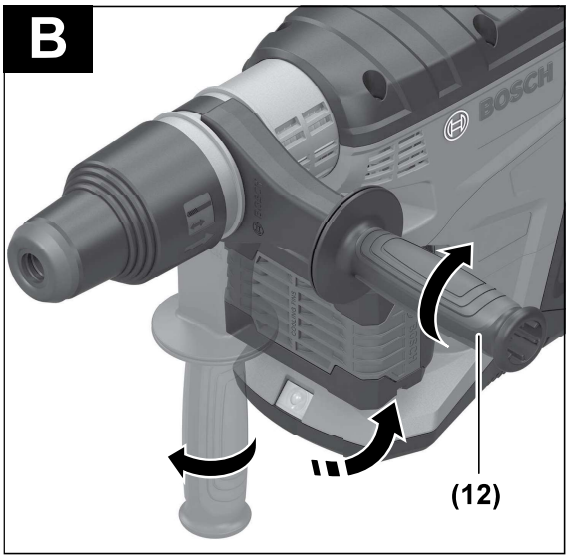
B
BOSCH
(12)

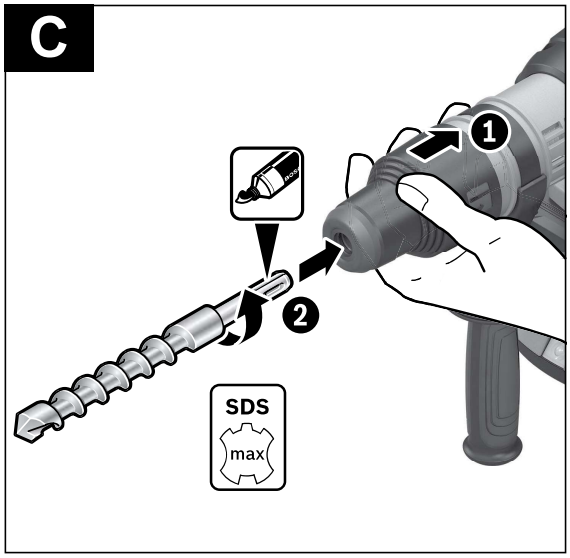
C
1
2
SDS
max

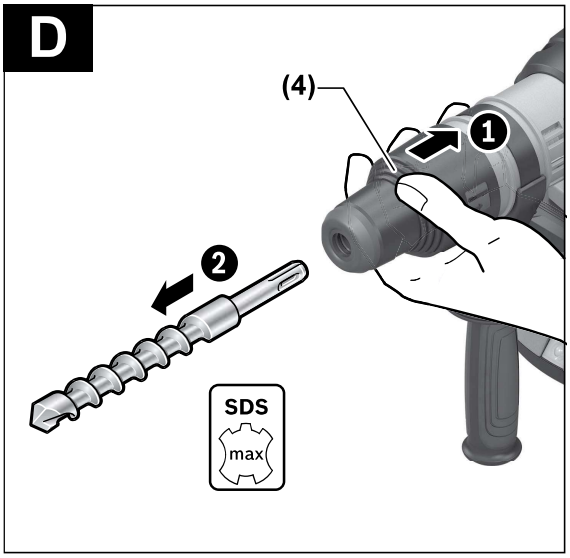
D
(4)
1
2
SDS
max

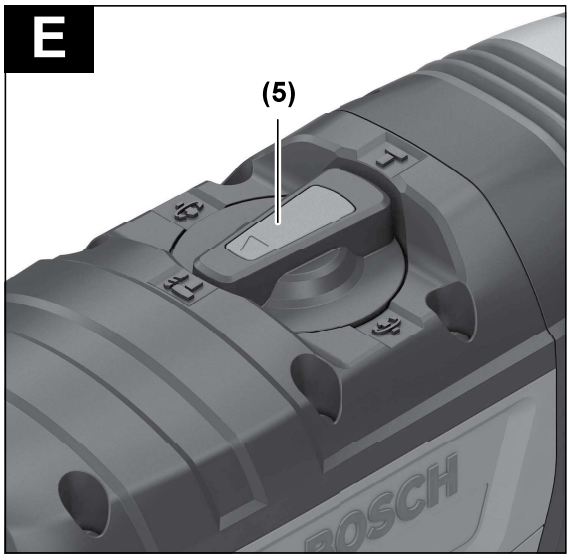
E
(5)
BOSCH

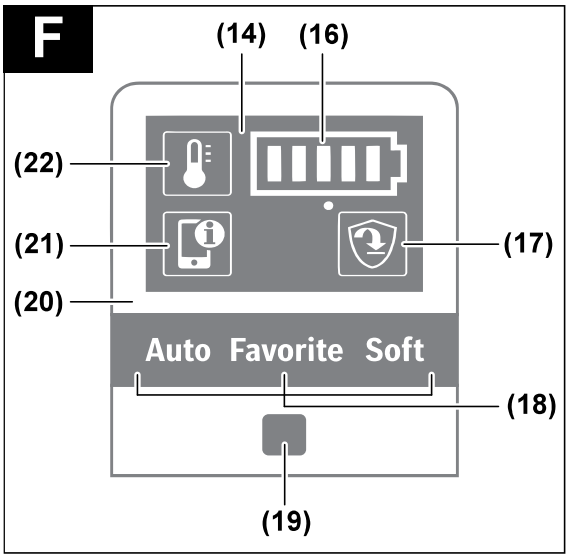
F
(14)
(16)
(22)
(21)
(17)
(20)
Auto Favorite Soft
(18)
(19)

# English

## Safety instructions

### General Power Tool Safety Warnings

**⚠ WARNING** **Read all safety warnings, instructions, illustrations and specifications provided with this power tool.** Failure to follow all instructions listed below may result in electric shock, fire and/or serious injury.

**Save all warnings and instructions for future reference.**

The term "power tool" in the warnings refers to your mains-operated (corded) power tool or battery-operated (cordless) power tool.

**Work area safety**

- **Keep work area clean and well lit.** Cluttered or dark areas invite accidents.
- **Do not operate power tools in explosive atmospheres, such as in the presence of flammable liquids, gases or dust.** Power tools create sparks which may ignite the dust or fumes.
- **Keep children and bystanders away while operating a power tool.** Distractions can cause you to lose control.

**Electrical safety**

- **Power tool plugs must match the outlet. Never modify the plug in any way. Do not use any adapter plugs with earthed (grounded) power tools.** Unmodified plugs and matching outlets will reduce risk of electric shock.
- **Avoid body contact with earthed or grounded surfaces, such as pipes, radiators, ranges and refrigerators.** There is an increased risk of electric shock if your body is earthed or grounded.
- **Do not expose power tools to rain or wet conditions.** Water entering a power tool will increase the risk of electric shock.
- **Do not abuse the cord. Never use the cord for carrying, pulling or unplugging the power tool. Keep cord away from heat, oil, sharp edges or moving parts.** Damaged or entangled cords increase the risk of electric shock.
- **When operating a power tool outdoors, use an extension cord suitable for outdoor use.** Use of a cord suitable for outdoor use reduces the risk of electric shock.
- **If operating a power tool in a damp location is unavoidable, use a residual current device (RCD) protected supply.** Use of an RCD reduces the risk of electric shock.

**Personal safety**

- **Stay alert, watch what you are doing and use common sense when operating a power tool. Do not use a power tool while you are tired or under the influence of drugs, alcohol or medication.** A moment of inattention while operating power tools may result in serious personal injury.
- **Use personal protective equipment. Always wear eye protection.** Protective equipment such as a dust mask, non-skid safety shoes, hard hat or hearing protection used for appropriate conditions will reduce personal injuries.
- **Prevent unintentional starting. Ensure the switch is in the off-position before connecting to power source and/or battery pack, picking up or carrying the tool.** Carrying power tools with your finger on the switch or energising power tools that have the switch on invites accidents.
- **Remove any adjusting key or wrench before turning the power tool on.** A wrench or a key left attached to a rotating part of the power tool may result in personal injury.
- **Do not overreach. Keep proper footing and balance at all times.** This enables better control of the power tool in unexpected situations.
- **Dress properly. Do not wear loose clothing or jewellery. Keep your hair and clothing away from moving parts.** Loose clothes, jewellery or long hair can be caught in moving parts.
- **If devices are provided for the connection of dust extraction and collection facilities, ensure these are connected and properly used.** Use of dust collection can reduce dust-related hazards.
- **Do not let familiarity gained from frequent use of tools allow you to become complacent and ignore tool safety principles.** A careless action can cause severe injury within a fraction of a second.

**Power tool use and care**

- **Do not force the power tool. Use the correct power tool for your application.** The correct power tool will do the job better and safer at the rate for which it was designed.
- **Do not use the power tool if the switch does not turn it on and off.** Any power tool that cannot be controlled with the switch is dangerous and must be repaired.
- **Disconnect the plug from the power source and/or remove the battery pack, if detachable, from the power tool before making any adjustments, changing accessories, or storing power tools.** Such preventive safety measures reduce the risk of starting the power tool accidentally.
- **Store idle power tools out of the reach of children and do not allow persons unfamiliar with the power tool or these instructions to operate the power tool.** Power tools are dangerous in the hands of untrained users.
- **Maintain power tools and accessories. Check for misalignment or binding of moving parts, breakage of parts and any other condition that may affect the power tool's operation. If damaged, have the power tool repaired before use.** Many accidents are caused by poorly maintained power tools.

- ▶ **Keep cutting tools sharp and clean.** Properly maintained cutting tools with sharp cutting edges are less likely to bind and are easier to control.
- ▶ **Use the power tool, accessories and tool bits etc. in accordance with these instructions, taking into account the working conditions and the work to be performed.** Use of the power tool for operations different from those intended could result in a hazardous situation.
- ▶ **Keep handles and grasping surfaces dry, clean and free from oil and grease.** Slippery handles and grasping surfaces do not allow for safe handling and control of the tool in unexpected situations.

**Battery tool use and care**

- ▶ **Recharge only with the charger specified by the manufacturer.** A charger that is suitable for one type of battery pack may create a risk of fire when used with another battery pack.
- ▶ **Use power tools only with specifically designated battery packs.** Use of any other battery packs may create a risk of injury and fire.
- ▶ **When battery pack is not in use, keep it away from other metal objects, like paper clips, coins, keys, nails, screws or other small metal objects, that can make a connection from one terminal to another.** Shorting the battery terminals together may cause burns or a fire.
- ▶ **Under abusive conditions, liquid may be ejected from the battery; avoid contact. If contact accidentally occurs, flush with water. If liquid contacts eyes, additionally seek medical help.** Liquid ejected from the battery may cause irritation or burns.
- ▶ **Do not use a battery pack or tool that is damaged or modified.** Damaged or modified batteries may exhibit unpredictable behaviour resulting in fire, explosion or risk of injury.
- ▶ **Do not expose a battery pack or tool to fire or excessive temperature.** Exposure to fire or temperature above 130°C may cause explosion.
- ▶ **Follow all charging instructions and do not charge the battery pack or tool outside the temperature range specified in the instructions.** Charging improperly or at temperatures outside the specified range may damage the battery and increase the risk of fire.

**Service**

- ▶ **Have your power tool serviced by a qualified repair person using only identical replacement parts.** This will ensure that the safety of the power tool is maintained.
- ▶ **Never service damaged battery packs.** Service of battery packs should only be performed by the manufacturer or authorized service providers.

## Hammer Safety Warnings

**Safety instructions for all operations**

- ▶ **Wear ear protectors.** Exposure to noise can cause hearing loss.
- ▶ **Use auxiliary handle(s), if supplied with the tool.** Loss of control can cause personal injury.
- ▶ **Hold the power tool by insulated gripping surfaces, when performing an operation where the cutting accessory may contact hidden wiring.** Cutting accessory contacting a "live" wire may make exposed metal parts of the power tool "live" and could give the operator an electric shock.

**Safety instructions when using long drill bits with rotary hammers**

- ▶ **Always start drilling at low speed and with the bit tip in contact with the workpiece.** At higher speeds, the bit is likely to bend if allowed to rotate freely without contacting the workpiece, resulting in personal injury.
- ▶ **Apply pressure only in direct line with the bit and do not apply excessive pressure.** Bits can bend, causing breakage or loss of control, resulting in personal injury.

**Additional safety information**

- ▶ **Use suitable detectors to determine if there are hidden supply lines or contact the local utility company for assistance.** Contact with electric cables can cause fire and electric shock. Damaging gas lines can lead to explosion. Breaking water pipes causes property damage.
- ▶ **Always wait until the power tool has come to a complete stop before placing it down.** The application tool can jam and cause you to lose control of the power tool.
- ▶ **Secure the workpiece.** A workpiece clamped with clamping devices or in a vice is held more secure than by hand.
- ▶ **In case of damage and improper use of the battery, vapours may be emitted. The battery can set alight or explode.** Ensure the area is well ventilated and seek medical attention should you experience any adverse effects. The vapours may irritate the respiratory system.
- ▶ **Do not open the battery.** There is a risk of short-circuiting.
- ▶ **The battery can be damaged by pointed objects such as nails or screwdrivers or by force applied externally.** An internal short circuit may occur, causing the battery to burn, smoke, explode or overheat.
- ▶ **Only use the battery with products from the manufacturer.** This is the only way in which you can protect the battery against dangerous overload.





**Protect the battery against heat, e.g. against continuous intense sunlight, fire, dirt, water and moisture.** There is a risk of explosion and short-circuiting.

- ▶ **Do not touch any application tools or adjacent housing components shortly after operation.** These can become very hot during operation and cause burns.
- ▶ **The application tool may jam during drilling. Make sure you have a stable footing and hold the power tool firmly with both hands.** Otherwise you could lose control of the power tool.

- ▶ **Take care when carrying out demolition work using the chisel.** Falling fragments of the demolition material could injure you or any bystanders.
- ▶ **Hold the power tool firmly with both hands and make sure you have a stable footing.** The power tool can be more securely guided with both hands.
- ▶ **Caution! When using the power tool with *Bluetooth*®, a fault may occur in other devices and systems, aeroplanes and medical devices (e.g. pacemakers, hearing aids). Also, damage to people and animals in the immediate vicinity cannot be completely excluded. Do not use the power tool with *Bluetooth*® in the vicinity of medical devices, petrol stations, chemical plants, areas with a potentially explosive atmosphere or in blasting areas. Do not use the power tool with *Bluetooth*® in aircraft. Avoid using the product near your body for extended periods.**

**The *Bluetooth*® word mark and logos are registered trademarks owned by Bluetooth SIG, Inc. and any use of such marks by Robert Bosch Power Tools GmbH is under license.**

# Symbols

The following symbols may be important for the operation of your power tool. Please take note of these symbols and their meaning. Correctly interpreting the symbols will help you to operate the power tool more effectively and safely.

| Symbols and their meaning | |
|---|---|
|  | To change the application tool, pull back the locking sleeve. |

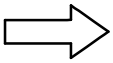

# Product Description and Specifications



**Read all the safety and general instructions.** Failure to observe the safety and general instructions may result in electric shock, fire and/or serious injury.

Please observe the illustrations at the beginning of this operating manual.

## Intended Use

The power tool is intended for hammer drilling in concrete, masonry and stone, as well as for chiselling work.

With the *Bluetooth*® Low Energy Module **GCY 42** inserted, power tool data and settings can be transferred between the power tool and a mobile device by means of *Bluetooth*® wireless technology.

## Product Features

The numbering of the product features refers to the diagram of the power tool on the graphics page.

**(1)** SDS max drill chuck
**(2)** SDS max tool holder
**(3)** Dust protection cap
**(4)** Locking sleeve
**(5)** Mode selector switch
**(6)** Vibration damping
**(7)** Lock-on button for on/off switch
**(8)** Handle (insulated gripping surface)
**(9)** On/off switch
**(10)** Rechargeable battery[a)]
**(11)** Worklight
**(12)** Auxiliary handle (insulated gripping surface)
**(13)** Rechargeable battery release button[a)]
**(14)** User Interface
**(15)** Cover for GCY 42 *Bluetooth*® Low Energy Module
**(16)** Battery charge indicator (user interface)
**(17)** Rapid shut-off indicator (user interface)
**(18)** Working modes indicator (user interface)
**(19)** Button to select the working mode (user interface)
**(20)** Power tool status indicator (user interface)
**(21)** Smartphone symbol (user interface)
**(22)** Temperature indicator (user interface)

a) **Accessories shown or described are not included with the product as standard. You can find the complete selection of accessories in our accessories range.**

## Technical Data

| Cordless rotary hammer | | GBH 18V-40 C | GBH 18V-40 C |
|---|---|---|---|
| Article number | | **3 611 J17 0..** | **3 611 J17 1..** |
| Rated voltage | V= | 18 | 18 |
| Impact rate[A)] | $min^{-1}$ | 0–3130 | 0–3130 |
| Impact energy per stroke according to EPTA-Procedure 05:2016 | J | 9.0 | 9.0 |
| Rated speed | $min^{-1}$ | 0–360 | 0–360 |
| Tool holder | | SDS-max | SDS-max |
| *Bluetooth*® Low Energy Module GCY 42 | | ●[B)] | –[C)] |

| Cordless rotary hammer | | GBH 18V-40 C | GBH 18V-40 C |
|---|---|---|---|
| Max. drilling diameter: | | | |
| – Concrete | mm | 40 | 40 |
| – Concrete (with hollow core bit) | mm | 90 | 90 |
| Weight according to EPTA-Procedure 01:2014[D] | kg | 7.4–8.4 | 7.4–8.4 |
| Length | mm | 502 | 502 |
| Height | mm | 253 | 253 |
| Recommended ambient temperature during charging | °C | 0 to +35 | 0 to +35 |
| Permitted ambient temperature during operation[E] and during storage | °C | –20 to +50 | –20 to +50 |
| Compatible rechargeable batteries | | GBA 18V...<br>ProCORE18V... | GBA 18V...<br>ProCORE18V... |
| Recommended rechargeable batteries for maximum performance | | ProCORE18V... ≥ 5.5 Ah | ProCORE18V... ≥ 5.5 Ah |
| Recommended chargers | | GAL 18...<br>GAX 18...<br>GAL 36... | GAL 18...<br>GAX 18...<br>GAL 36... |
| **Data transfer** | | | |
| *Bluetooth*® | | *Bluetooth*® 4.2 (Low Energy)[F] | *Bluetooth*® 4.2 (Low Energy)[F] |
| Signal interval | s | 8 | 8 |
| Max. signal range[G] | m | 30 | 30 |

A) Measured at 20–25 °C with rechargeable battery **GBA 18V 8.0Ah**.

B) Pre-assembled

C) Can be retrofitted

D) Depends on battery in use

E) Limited performance at temperatures < 0 °C and > 40 °C

F) The mobile devices must be compatible with *Bluetooth*® Low Energy devices (version 4.2) and support the Generic Access Profile (GAP).

G) The signal range may vary greatly depending on external conditions, including the receiving device used. The *Bluetooth*® range may be significantly weaker inside closed rooms and through metallic barriers (e.g. walls, shelving units, cases, etc.).

## Noise/Vibration Information

Noise emission values determined according to **EN IEC 62841-2-6**.

Typically, the A-weighted noise level of the power tool is: Sound pressure level **93** dB(A); sound power level **104** dB(A). Uncertainty K = **4** dB.

**Wear hearing protection!**

Vibration total values $a_h$ (triax vector sum) and uncertainty K determined according to **EN IEC 62841-2-6**:

Hammer drilling into concrete: $a_h$=**7.5** m/s$^2$, K=**1.5** m/s$^2$,

Chiselling: $a_h$=**7.0** m/s$^2$, K=**1.5** m/s$^2$,

The vibration level and noise emission value given in these instructions have been measured in accordance with a standardised measuring procedure and may be used to compare power tools. They may also be used for a preliminary estimation of vibration and noise emissions.

The stated vibration level and noise emission value represent the main applications of the power tool. However, if the power tool is used for other applications, with different application tools or is poorly maintained, the vibration level and noise emission value may differ. This may significantly increase the vibration and noise emissions over the total working period.

To estimate vibration and noise emissions accurately, the times when the tool is switched off or when it is running but not actually being used should also be taken into account. This may significantly reduce vibration and noise emissions over the total working period.

Implement additional safety measures to protect the operator from the effects of vibration, such as servicing the power tool and application tools, keeping their hands warm, and organising workflows correctly.

# Rechargeable battery

**Bosch** sells some cordless power tools without a rechargeable battery. You can tell whether a rechargeable battery is included with the power tool by looking at the packaging.

### Charging the battery

▶ **Use only the chargers listed in the technical data.** Only these chargers are matched to the lithium-ion battery of your power tool.

**Note:** Lithium-ion rechargeable batteries are supplied partially charged according to international transport regulations. To ensure full rechargeable battery capacity, fully charge the rechargeable battery before using your tool for the first time.

### Inserting the Battery

Push the charged battery into the battery holder until it clicks into place.

### Removing the Battery

To remove the rechargeable battery, press the battery release button and pull the battery out. **Do not use force to do this.**

The rechargeable battery has two locking levels to prevent the battery from falling out if the battery release button is pressed unintentionally. The rechargeable battery is held in place by a spring when fitted in the power tool.

### Battery charge indicator

The green LEDs on the battery charge indicator indicate the state of charge of the battery. For safety reasons, it is only possible to check the state of charge when the power tool is not in operation.

Press the button for the battery charge indicator or to show the state of charge. This is also possible when the battery is removed.

If no LED lights up after pressing the button for the battery charge indicator, then the battery is defective and must be replaced.

The state of charge of the battery is also displayed on the user interface Status indications.

**Battery model GBA 18V...**




| LED | Capacity |
|---|---|
| 3× continuous green light | 60–100 % |
| 2× continuous green light | 30–60 % |
| 1× continuous green light | 5–30 % |
| 1× flashing green light | 0–5 % |

**Battery model ProCORE18V...**



| LED | Capacity |
|---|---|
| 5 × continuous green light | 80–100 % |
| 4 × continuous green light | 60–80 % |
| 3 × continuous green light | 40–60 % |
| 2 × continuous green light | 20–40 % |
| 1 × continuous green light | 5–20 % |
| 1 × flashing green light | 0–5 % |

### Recommendations for Optimal Handling of the Battery

Protect the battery against moisture and water.

Only store the battery within a temperature range of −20 to 50 °C. Do not leave the battery in your car in the summer, for example.

Occasionally clean the ventilation slots on the battery using a soft brush that is clean and dry.

A significantly reduced operating time after charging indicates that the battery has deteriorated and must be replaced.

Follow the instructions on correct disposal.

## Assembly

▶ **Remove the battery from the power tool before carrying out work on the power tool (e.g. maintenance, changing tool, etc.). The battery should also be removed for transport and storage.** There is risk of injury from unintentionally pressing the on/off switch.

▶ **Before carrying out any work on the power tool (e.g. maintenance, tool change, etc.) as well as during transport and storage, press the lock-on button to lock the on/off switch.** There is risk of injury from unintentionally pressing the on/off switch.

### Inserting the *Bluetooth*® Low Energy Module GCY 42 (Accessory)

Read the corresponding operating instructions for information about the *Bluetooth*® Low Energy Module **GCY 42**.

### Auxiliary handle

▶ **Do not operate your power tool without the auxiliary handle (12).**

▶ **Make sure that the auxiliary handle is always tightened.** Otherwise you could lose control of the power tool when working.

**Swivelling the auxiliary handle (see figure B)**

You can swivel the auxiliary handle **(12)** to any angle for a safe work posture that minimises fatigue.

– Turn the lower gripping end of the auxiliary handle **(12)** anticlockwise and swivel the auxiliary handle **(12)** into the required position. Then turn the lower gripping end of the auxiliary handle **(12)** clockwise to retighten it. Make sure that the retaining strap of the auxiliary handle slots into the corresponding groove of the housing.

### Selecting drill chucks and tools

For hammer drilling and chiselling, you will need SDS max tools, which insert into the SDS max drill chuck.

## Changing the Tool

The dust protection cap **(3)** largely prevents the penetration of drilling dust into the tool holder during operation. When inserting the tool, make sure that the dust protection cap **(3)** does not become damaged.

▶ **Replace a damaged dust protection cap immediately. It is recommended that you have use an after-sales service for this.**

**Changing the Tool (SDS max)**

**Inserting the Application Tool (see figure C)**

With the SDS-max tool holder, you can change the application tool simply and easily without additional aids.

– Clean and lightly grease the shank of the application tool.
– Push the locking sleeve **(4)** back and insert the application tool by turning it into the tool holder. Release the locking sleeve **(4)** to lock the application tool.
– Check that it is locked by pulling on the tool.

**Removing the application tool (see figure D)**

– Push the locking sleeve **(4)** back and remove the application tool.

## Dust/Chip Extraction

Dust from materials such as lead-containing coatings, some wood types, minerals and metal can be harmful to one's health. Touching or breathing-in the dust can cause allergic reactions and/or lead to respiratory infections of the user or bystanders.

Certain dust, such as oak or beech dust, is considered carcinogenic, especially in connection with wood-treatment additives (chromate, wood preservative). Materials containing asbestos may only be worked by specialists.

– Provide for good ventilation of the working place.
– It is recommended to wear a P2 filter-class respirator.

Observe the relevant regulations in your country for the materials to be worked.

▶ **Avoid dust accumulation at the workplace.** Dust can easily ignite.

# Operation

## Start-up

▶ Ensure that the cover **(15)** of the *Bluetooth*® Low Energy Module GCY 42 is closed during operation. This will prevent dust from getting in.

**Setting the Operating Mode (see figure E)**

The operating mode of the power tool is selected using the mode selector switch **(5)**.

– To change the operating mode, turn the mode selector switch **(5)** to the required position.

**Note:** Only change the operating mode when the power tool is switched off. Otherwise, the power tool may become damaged.

**Note:** If you switch to a different operating mode while the on/off switch is locked, the power tool will switch off.



Position for **hammer drilling**
If the application tool does not start rotating straight away, run the power tool slowly until the application tool starts rotating.



**Vario-Lock** position for changing the chiselling position

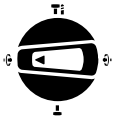



Position for **chiselling**

**Switching On/Off**

– If necessary, release the lock-on button **(7)** for the on/off switch.
– To **switch on** the power tool, press the on/off switch **(9)**.

The worklight **(11)** lights up when the on/off switch **(9)** is lightly or fully pressed, allowing the work area to be illuminated in poor lighting conditions.

– To **switch off** the power tool, release the on/off switch **(9)**.

For low temperatures, the power tool reaches the full hammer/impact capacity only after a certain time.

**Adjusting the Speed/Impact Rate**

You can adjust the speed/impact rate of the power tool when it is on by pressing in the on/off switch **(9)** to varying extents.

Applying light pressure to the on/off switch **(9)** results in a low rotational speed/impact rate. Applying increasing pressure to the switch increases the speed/impact rate.

You can also control the speed on the user interface and/or via a smartphone app: .

**Changing the chiselling position (Vario-Lock)**

You can lock the chisel in **16** different positions, allowing you to select the optimum working position for each task.

– Insert the chisel into the tool holder.
– Turn the mode selector switch **(5)** to the "drilling" position.
– Turn the application tool to the required chisel position.
– Turn the mode selector switch **(5)** to the "chiselling" position. With this, the tool holder is locked.

**Chiselling with lock function**

To chisel for extended periods without pressing the on/off switch **(9)**, lock the on/off switch in "chiselling" operating mode.

– To **lock** the power tool, press the on/off switch **(9)** down fully whilst simultaneously pressing the lock-on switch **(7)**.
– To switch the lock off, press the lock-on button **(7)** again.

## User interface (see figure F)

The user interface **(14)** is used to select the working mode and to indicate the status of the power tool.

### Status indications

| Power tool status indicator (20) | Meaning/cause | Solution |
|---|---|---|
| Green | Status OK | – |
| Yellow | Critical temperature has been reached or rechargeable battery is almost empty | Run the power tool at no load and allow it to cool down, or replace or charge the battery soon |
| Red | Power tool has overheated or rechargeable battery is empty | Allow the power tool to cool down, or replace or charge the battery |
| Red | Lock-on button pressed in "hammer drilling" operating mode | Press the lock-on button again |
| | Rotation stop switch activated during operation | Turn the power tool off and on again |
| | Motor is jammed, battery too weak | Charge the battery or use the recommended battery type |
| | General error | – Turn the power tool off and on again, or remove the battery and reinsert it<br>If the error persists:<br>– Send the power tool to the after-sales service |
| Flashing red<br>– In combination with the rapid shut-off indicator **(17)** | Rapid shut-off is triggered | Turn the power tool off and on again |
| Flashing blue | Power tool is establishing a connection to a mobile device or settings are being transferred | – |

| Battery charge indicator (user interface) (16) | Meaning/cause | Solution |
|---|---|---|
| Green (2 to 5 bars) | Battery charged | – |
| Yellow (1 bar) | Battery almost empty | Replace or charge battery soon |
| Red (1 bar) | Battery empty | Replace or charge battery |

| Smartphone symbol (21) | Meaning/cause |
|---|---|
| – | Further information can be found on a mobile device if it is connected via *Bluetooth*® wireless technology. |

| Temperature indicator (22) | Meaning/cause | Solution |
|---|---|---|
| Yellow | Operating temperature of the battery or the power tool has significantly increased, performance is reduced | Leave the power tool to cool down or replace overheated battery |
| Red | Operating temperature of the battery or the power tool has been exceeded, power tool switches itself off as a precautionary measure | Leave the power tool to cool down or replace overheated battery |

### Selecting the working mode

Press the **(19)** button for selecting the working mode repeatedly until the working mode you require lights up.

**Note:** The functions are preset in **Auto** and **Soft** work modes. In **Favorite** working mode, the preset functions can be configured via a smartphone app.

| Working mode (18) indicator | Functions |
|---|---|
| **Auto** lights up | **Auto** working mode: **Fast, controlled run-up** up to maximum power<br>– "Hammer drilling" operating mode (Electronic Precision Control soft start): Fast, controlled run-up up to maximum power<br>– Rapid Shut-off (KickBack Control) active<br>– "Chiselling" operating mode (Adaptive Speed Control soft start): Fast, controlled run-up up to maximum power |
| **Favorite** lights up | **Favorite** working mode: **Individual configuration via smartphone app** (only **3 611 J17 0..** in combination with the *Bluetooth*® Low Energy module **GCY 42**)<br>The following settings are **preconfigured**:<br>– "Hammer drilling" operating mode (Electronic Precision Control soft start): Controlled run-up up to reduced, medium power<br>– Rapid Shut-off (KickBack Control) active<br>– "Chiselling" operating mode (Adaptive Speed Control soft start): Fastest possible run-up up to maximum power |
| **Soft** lights up | **Soft** working mode: **Reduced power for processing sensitive materials**<br>– "Hammer drilling" operating mode (Electronic Precision Control soft start): Slow, strictly controlled run-up up to reduced, low power<br>– Rapid Shut-off (KickBack Control) active<br>– "Chiselling" operating mode (Adaptive Speed Control soft start): Slow, strictly controlled run-up up to reduced power |

## Connectivity functions

In conjunction with the *Bluetooth*® Low Energy Module **GCY 42**, the following connectivity functions are available for the power tool:

– Registration and personalisation
– Status check, output of warning messages
– General information and settings
– Management

Read the corresponding operating instructions for information about the *Bluetooth*® Low Energy Module **GCY 42**.

## Practical Advice

▶ **With the *Bluetooth*® Low Energy Module GCY 42, the power tool is equipped with a radio interface. Local operating restrictions, e.g. in aircraft or hospitals, must be observed.**

▶ **In areas in which the *Bluetooth*® wireless technology must not be used, the *Bluetooth*® Low Energy Module GCY 42 and the coin cell must be removed.**

**Note:** The cover **(15)** can only be closed securely if the *Bluetooth*® Low Energy Module GCY 42 and the coin cell are in the power tool.

– To **deactivate** the *Bluetooth*® Low Energy Module GCY 42, turn the coin cell over or place a means of insulation between the coin cell and *Bluetooth*® Low Energy Module GCY 42.
– Close the cover **(15)** to prevent dirt from getting in.

**Overload clutch**

▶ **If the application tool jams or snags, the power transmission to the drill spindle will be interrupted. Always hold the power tool firmly with both hands to withstand the forces this may create and adopt a position with stable footing.**

▶ **Switch the power tool off immediately and remove the application tool if the power tool becomes blocked. Switching on when the drilling tool is blocked may cause high torque reactions.**

**Rapid shut-off (KickBack Control)**




The rapid shut-off function (KickBack Control) gives the user greater control over the power tool and offers them better protection than power tools that do not have Kickback Control. If the power tool suddenly and unforeseeably rotates around the drilling axis, it will switch off, the rapid shut-off indicator **(17)** will light up red and the worklight **(11)** will flash. When rapid shut-off is activated, the status indicator **(20)** flashes red.

– To **switch the tool back on**, release the on/off switch **(9)** and then press it again.

**Electronic Precision Control (EPC)**

EPC assists you when drilling and when working with impact in sensitive materials by ensuring slow start-up of the operating speed for precise working.

**Adaptive Speed Control in "Chiselling" Operating Mode**




For better control and precise positioning, the power tool starts at a low speed and then increases to the set speed. Adapted Speed Control is started up automatically when the power tool is switched on.

**Vibration damping**

Vibration Control The integrated vibration damping function reduces the generated vibration.

- ▶ **Do not continue to use the power tool if the damping element is damaged.**

# Maintenance and Service

## Maintenance and Cleaning

- ▶ **Remove the battery from the power tool before carrying out work on the power tool (e.g. maintenance, changing tool, etc.). The battery should also be removed for transport and storage.** There is risk of injury from unintentionally pressing the on/off switch.
- ▶ **To ensure safe and efficient operation, always keep the power tool and the ventilation slots clean.**
- ▶ **Replace a damaged dust protection cap immediately. It is recommended that you have use an after-sales service for this.**
- – Clean the tool holder **(2)** after each use.

## After-Sales Service and Application Service

Our after-sales service responds to your questions concerning maintenance and repair of your product as well as spare parts. You can find explosion drawings and information on spare parts at: **www.bosch-pt.com**
The Bosch product use advice team will be happy to help you with any questions about our products and their accessories.

In all correspondence and spare parts orders, please always include the 10-digit article number given on the nameplate of the product.

**Malaysia**
Robert Bosch Sdn. Bhd.(220975-V) PT/SMY
No. 8A, Jalan 13/6
46200 Petaling Jaya
Selangor
Tel.: (03) 79663194
Toll-Free: 1800 880188
Fax: (03) 79583838
E-Mail: kiathoe.chong@my.bosch.com
www.bosch-pt.com.my

**You can find further service addresses at:**
www.bosch-pt.com/serviceaddresses

## Transport

The recommended lithium-ion batteries are subject to legislation on the transport of dangerous goods. The user can transport the batteries by road without further requirements.

When shipping by third parties (e.g.: by air transport or forwarding agency), special requirements on packaging and labelling must be observed. For preparation of the item being shipped, consulting an expert for hazardous material is required.

Dispatch battery packs only when the housing is undamaged. Tape or mask off open contacts and pack up the battery in such a manner that it cannot move around in the packaging. Please also observe the possibility of more detailed national regulations.

## Disposal



Power tools, rechargeable batteries, accessories and packaging should be sorted for environmental-friendly recycling.



Do not dispose of power tools and batteries/rechargeable batteries into household waste!

**Battery packs/batteries:**

**Li-ion:**

Please observe the notes in the section on transport (see "Transport", page 13).

# Français

## Consignes de sécurité

### Avertissements de sécurité généraux pour l'outil électrique

**⚠ AVERTISSEMENT** **Lire tous les avertissements de sécurité, les instructions, les illustrations et les spécifications fournis avec cet outil électrique.** Ne pas suivre les instructions énumérées ci-dessous peut provoquer un choc électrique, un incendie et/ou une blessure sérieuse.

**Conserver tous les avertissements et toutes les instructions pour pouvoir s'y reporter ultérieurement.**

Le terme "outil électrique" dans les avertissements fait référence à votre outil électrique alimenté par le secteur (avec cordon d'alimentation) ou votre outil électrique fonctionnant sur batterie (sans cordon d'alimentation).

**Sécurité de la zone de travail**

- ▶ **Conserver la zone de travail propre et bien éclairée.** Les zones en désordre ou sombres sont propices aux accidents.
- ▶ **Ne pas faire fonctionner les outils électriques en atmosphère explosive, par exemple en présence de liquides inflammables, de gaz ou de poussières.** Les ou-

tils électriques produisent des étincelles qui peuvent enflammer les poussières ou les fumées.

- ▶ **Maintenir les enfants et les personnes présentes à l'écart pendant l'utilisation de l'outil électrique.** Les distractions peuvent vous faire perdre le contrôle de l'outil.

**Sécurité électrique**

- ▶ **Il faut que les fiches de l'outil électrique soient adaptées au socle. Ne jamais modifier la fiche de quelque façon que ce soit. Ne pas utiliser d'adaptateurs avec des outils électriques à branchement de terre.** Des fiches non modifiées et des socles adaptés réduisent le risque de choc électrique.
- ▶ **Éviter tout contact du corps avec des surfaces reliées à la terre telles que les tuyaux, les radiateurs, les cuisinières et les réfrigérateurs.** Il existe un risque accru de choc électrique si votre corps est relié à la terre.
- ▶ **Ne pas exposer les outils électriques à la pluie ou à des conditions humides.** La pénétration d'eau à l'intérieur d'un outil électrique augmente le risque de choc électrique.
- ▶ **Ne pas maltraiter le cordon. Ne jamais utiliser le cordon pour porter, tirer ou débrancher l'outil électrique. Maintenir le cordon à l'écart de la chaleur, du lubrifiant, des arêtes vives ou des parties en mouvement.** Des cordons endommagés ou emmêlés augmentent le risque de choc électrique.
- ▶ **Lorsqu'on utilise un outil électrique à l'extérieur, utiliser un prolongateur adapté à l'utilisation extérieure.** L'utilisation d'un cordon adapté à l'utilisation extérieure réduit le risque de choc électrique.
- ▶ **Si l'usage d'un outil électrique dans un emplacement humide est inévitable, utiliser une alimentation protégée par un dispositif à courant différentiel résiduel (RCD).** L'usage d'un RCD réduit le risque de choc électrique.

**Sécurité des personnes**

- ▶ **Rester vigilant, regarder ce que vous êtes en train de faire et faire preuve de bon sens dans votre utilisation de l'outil électrique. Ne pas utiliser un outil électrique lorsque vous êtes fatigué ou sous l'emprise de drogues, de l'alcool ou de médicaments.** Un moment d'inattention en cours d'utilisation d'un outil électrique peut entraîner des blessures graves.
- ▶ **Utiliser un équipement de protection individuelle. Toujours porter une protection pour les yeux.** Les équipements de protection individuelle tels que les masques contre les poussières, les chaussures de sécurité antidérapantes, les casques ou les protections auditives utilisés pour les conditions appropriées réduisent les blessures.
- ▶ **Éviter tout démarrage intempestif. S'assurer que l'interrupteur est en position arrêt avant de brancher l'outil au secteur et/ou au bloc de batteries, de le ramasser ou de le porter.** Porter les outils électriques en ayant le doigt sur l'interrupteur ou brancher des outils électriques dont l'interrupteur est en position marche est source d'accidents.
- ▶ **Retirer toute clé de réglage avant de mettre l'outil électrique en marche.** Une clé laissée fixée sur une partie tournante de l'outil électrique peut donner lieu à des blessures.
- ▶ **Ne pas se précipiter. Garder une position et un équilibre adaptés à tout moment.** Cela permet un meilleur contrôle de l'outil électrique dans des situations inattendues.
- ▶ **S'habiller de manière adaptée. Ne pas porter de vêtements amples ou de bijoux. Garder les cheveux et les vêtements à distance des parties en mouvement.** Des vêtements amples, des bijoux ou les cheveux longs peuvent être pris dans des parties en mouvement.
- ▶ **Si des dispositifs sont fournis pour le raccordement d'équipements pour l'extraction et la récupération des poussières, s'assurer qu'ils sont connectés et correctement utilisés.** Utiliser des collecteurs de poussière peut réduire les risques dus aux poussières.
- ▶ **Rester vigilant et ne pas négliger les principes de sécurité de l'outil sous prétexte que vous avez l'habitude de l'utiliser.** Une fraction de seconde d'inattention peut provoquer une blessure grave.

**Utilisation et entretien de l'outil électrique**

- ▶ **Ne pas forcer l'outil électrique. Utiliser l'outil électrique adapté à votre application.** L'outil électrique adapté réalise mieux le travail et de manière plus sûre au régime pour lequel il a été construit.
- ▶ **Ne pas utiliser l'outil électrique si l'interrupteur ne permet pas de passer de l'état de marche à arrêt et inversement.** Tout outil électrique qui ne peut pas être commandé par l'interrupteur est dangereux et il faut le réparer.
- ▶ **Débrancher la fiche de la source d'alimentation et/ou enlever le bloc de batteries, s'il est amovible, avant tout réglage, changement d'accessoires ou avant de ranger l'outil électrique.** De telles mesures de sécurité préventives réduisent le risque de démarrage accidentel de l'outil électrique.
- ▶ **Conserver les outils électriques à l'arrêt hors de la portée des enfants et ne pas permettre à des personnes ne connaissant pas l'outil électrique ou les présentes instructions de le faire fonctionner.** Les outils électriques sont dangereux entre les mains d'utilisateurs novices.
- ▶ **Observer la maintenance des outils électriques et des accessoires. Vérifier qu'il n'y a pas de mauvais alignement ou de blocage des parties mobiles, des pièces cassées ou toute autre condition pouvant affecter le fonctionnement de l'outil électrique. En cas de dommages, faire réparer l'outil électrique avant de l'utiliser.** De nombreux accidents sont dus à des outils électriques mal entretenus.
- ▶ **Garder affûtés et propres les outils permettant de couper.** Des outils destinés à couper correctement en-