BOSCH

GBH 18V-34 CF Professional

HEAVY DUTY



Robert Bosch Power Tools GmbH
70538 Stuttgart
GERMANY

www.bosch-pt.com

1 609 92A 5JT (2020.10) PS / 129

1 609 92A 5JT

en Original instructions
fr Notice originale
pt Manual original
es Manual original
pt Manual de instruções original
zh 正本使用说明书
zh 原始使用說明書
th หนังสือคู่มือการใช้งานฉบับต้นแบบ
id Petunjuk-Petunjuk untuk Penggunaan Orisinal
vi Bản gốc hướng dẫn sử dụng
ar دليل التشغيل الأصلي
fa دفترچه راهنمای اصلی

English ..... Page 6
Français ..... Page 17
Português ..... Página 27
Español ..... Página 37
Português do Brasil ..... Página 48
中文 ..... 页 58
繁體中文 ..... 頁 66
ไทย ..... หน้า 74
Bahasa Indonesia ..... Halaman 85
Tiếng Việt ..... Trang 94
عربي ..... الصفحة 105
فارسی ..... صفحه 116

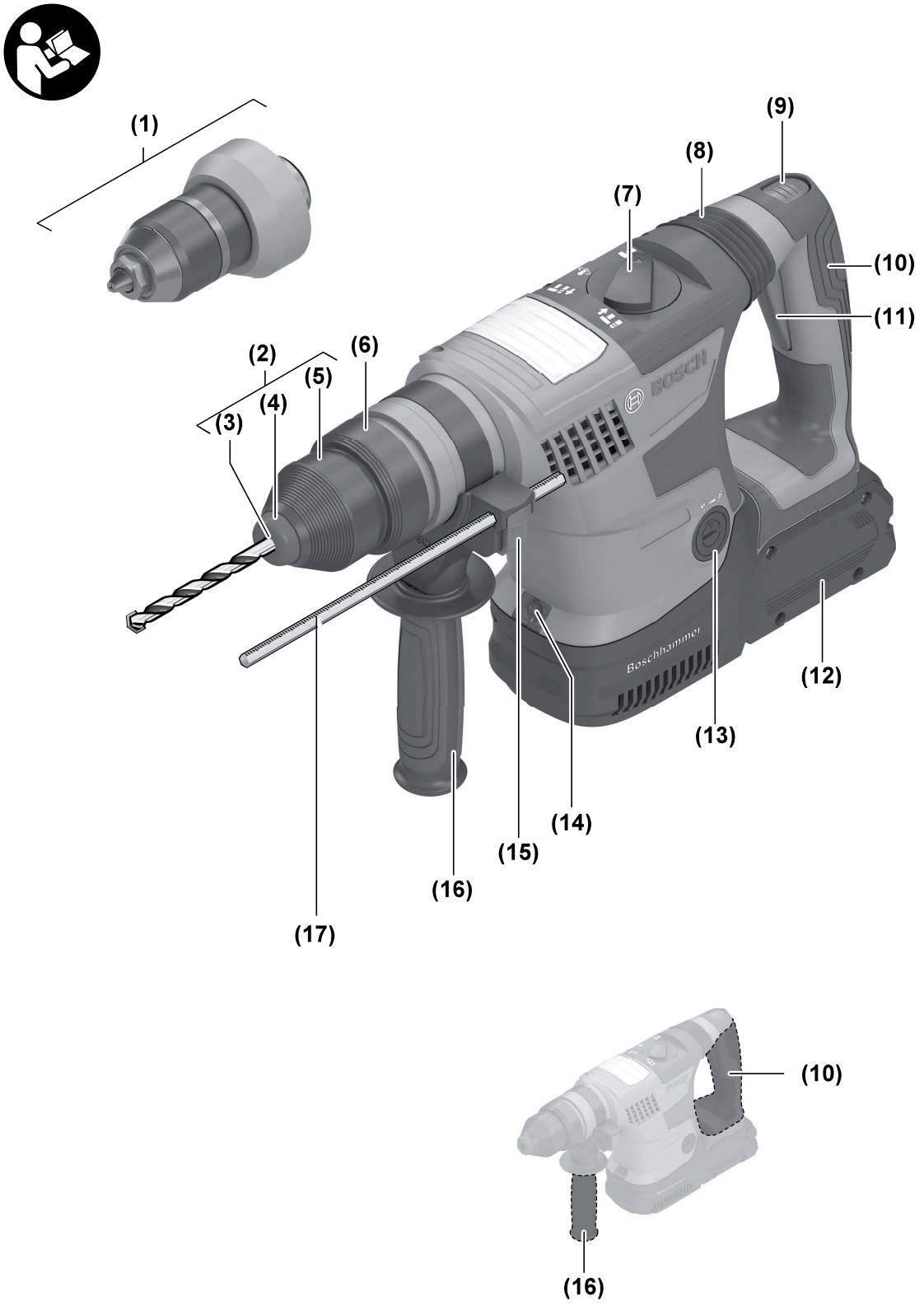
(1)
(2)
(3)
(4)
(5)
(6)
(7)
(8)
(9)
(10)
(11)
(12)
(13)
(14)
(15)
(16)
(17)
BOSCH
Boschhammer
(10)
(16)

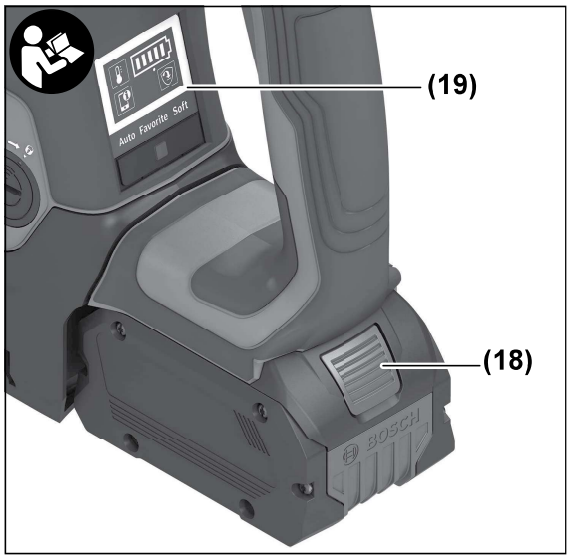
(19)
(18)
Auto Favorite Soft
BOSCH

A

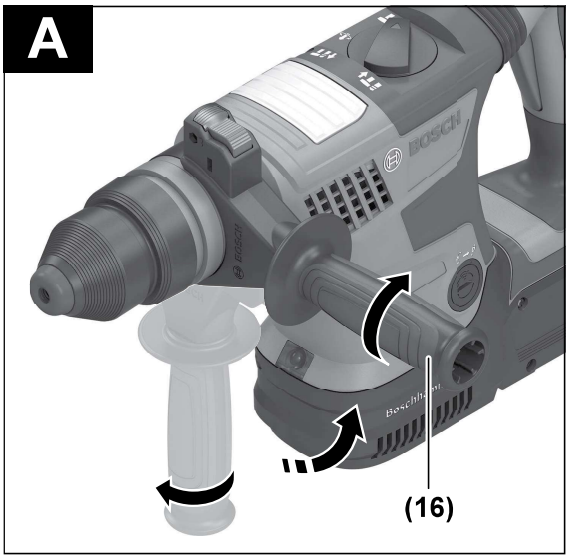
(16)
BOSCH

B

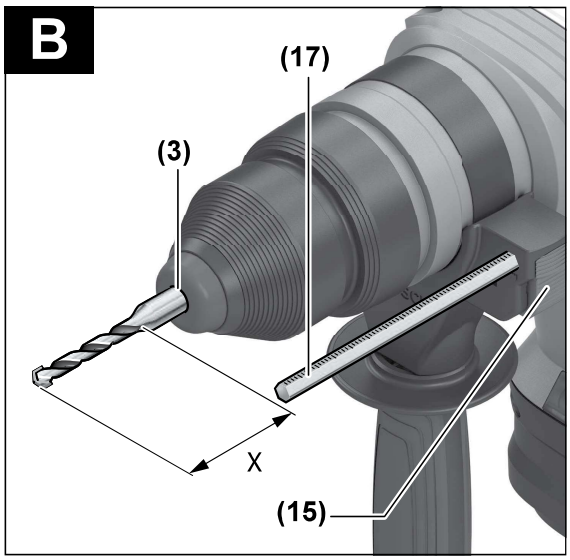
(17)
(3)
X
(15)

C

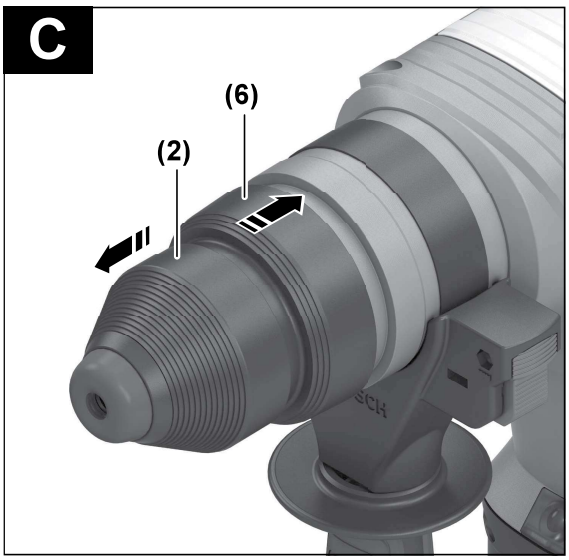
(6)
(2)

D

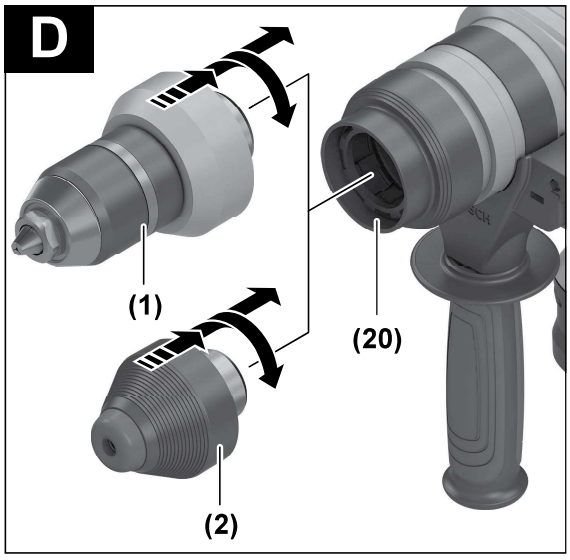
(1)
(20)
(2)

E

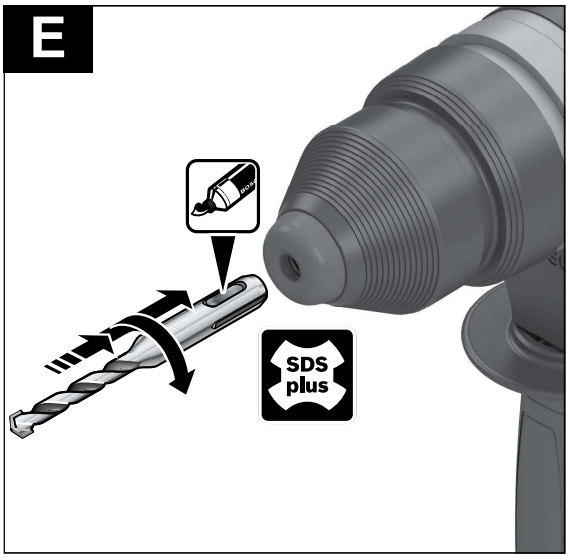
SDS plus

F

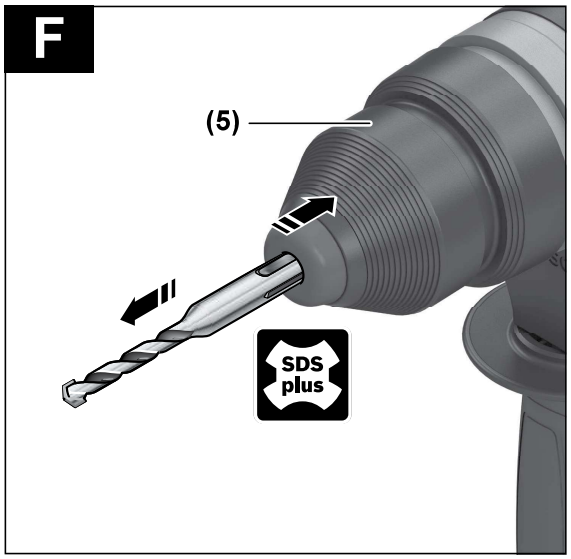

G

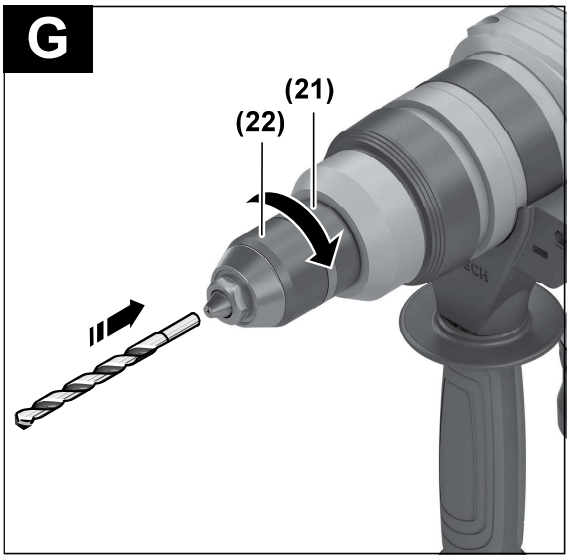

H

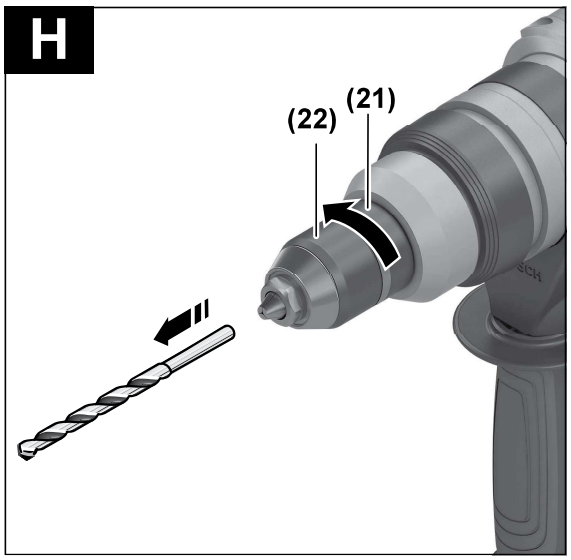

I

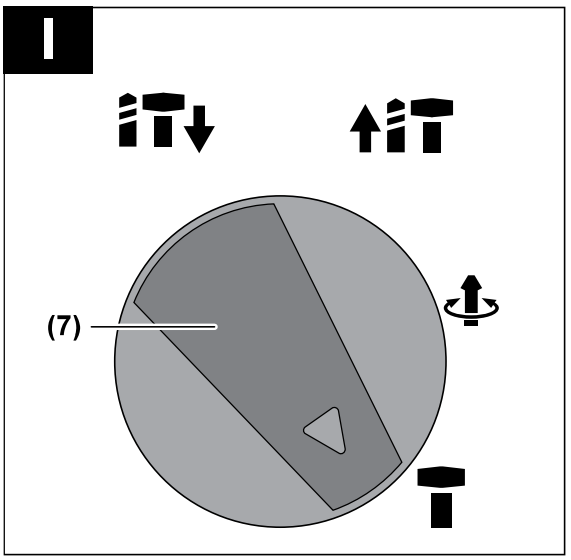

J

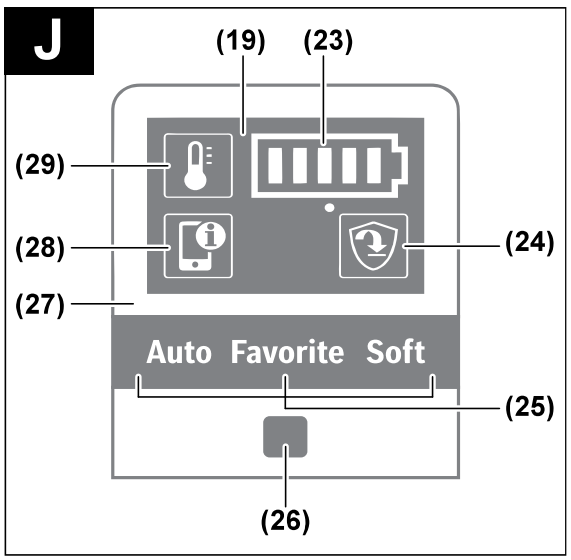

English

Safety instructions

General Power Tool Safety Warnings

⚠ WARNING **Read all safety warnings and all instructions.** Failure to follow the warnings and instructions may result in electric shock, fire and/or serious injury.

Save all warnings and instructions for future reference.

The term "power tool" in the warnings refers to your mains-operated (corded) power tool or battery-operated (cordless) power tool.

Work area safety

- **Keep work area clean and well lit.** Cluttered or dark areas invite accidents.
- **Do not operate power tools in explosive atmospheres, such as in the presence of flammable liquids, gases or dust.** Power tools create sparks which may ignite the dust or fumes.
- **Keep children and bystanders away while operating a power tool.** Distractions can cause you to lose control.

Electrical safety

- **Power tool plugs must match the outlet. Never modify the plug in any way. Do not use any adapter plugs with earthed (grounded) power tools.** Unmodified plugs and matching outlets will reduce risk of electric shock.
- **Avoid body contact with earthed or grounded surfaces, such as pipes, radiators, ranges and refrigerators.** There is an increased risk of electric shock if your body is earthed or grounded.
- **Do not expose power tools to rain or wet conditions.** Water entering a power tool will increase the risk of electric shock.
- **Do not abuse the cord. Never use the cord for carrying, pulling or unplugging the power tool. Keep cord away from heat, oil, sharp edges or moving parts.** Damaged or entangled cords increase the risk of electric shock.
- **When operating a power tool outdoors, use an extension cord suitable for outdoor use.** Use of a cord suitable for outdoor use reduces the risk of electric shock..
- **If operating a power tool in a damp location is unavoidable, use a residual current device (RCD) protected supply.** Use of an RCD reduces the risk of electric shock.

Personal safety

- **Stay alert, watch what you are doing and use common sense when operating a power tool. Do not use a power tool while you are tired or under the influence of drugs, alcohol or medication.** A moment of inattention while operating power tools may result in serious personal injury.
- **Use personal protective equipment. Always wear eye protection.** Protective equipment such as dust mask, non-skid safety shoes, hard hat, or hearing protection used for appropriate conditions will reduce personal injuries.
- **Prevent unintentional starting. Ensure the switch is in the off-position before connecting to power source and/or battery pack, picking up or carrying the tool.** Carrying power tools with your finger on the switch or energising power tools that have the switch on invites accidents.
- **Remove any adjusting key or wrench before turning the power tool on.** A wrench or a key left attached to a rotating part of the power tool may result in personal injury.
- **Do not overreach. Keep proper footing and balance at all times.** This enables better control of the power tool in unexpected situations.
- **Dress properly. Do not wear loose clothing or jewellery. Keep your hair, clothing and gloves away from moving parts.** Loose clothes, jewellery or long hair can be caught in moving parts.
- **If devices are provided for the connection of dust extraction and collection facilities, ensure these are connected and properly used.** Use of dust collection can reduce dust-related hazards.

Power tool use and care

- **Do not force the power tool. Use the correct power tool for your application.** The correct power tool will do the job better and safer at the rate for which it was designed.
- **Do not use the power tool if the switch does not turn it on and off.** Any power tool that cannot be controlled with the switch is dangerous and must be repaired.
- **Disconnect the plug from the power source and/or the battery pack from the power tool before making any adjustments, changing accessories, or storing power tools.** Such preventive safety measures reduce the risk of starting the power tool accidentally.
- **Store idle power tools out of the reach of children and do not allow persons unfamiliar with the power tool or these instructions to operate the power tool.** Power tools are dangerous in the hands of untrained users.
- **Maintain power tools. Check for misalignment or binding of moving parts, breakage of parts and any other condition that may affect the power tool's operation. If damaged, have the power tool repaired before use.** Many accidents are caused by poorly maintained power tools.
- **Keep cutting tools sharp and clean.** Properly maintained cutting tools with sharp cutting edges are less likely to bind and are easier to control.
- **Use the power tool, accessories and tool bits etc. in accordance with these instructions, taking into account the working conditions and the work to be per-**

formed. Use of the power tool for operations different from those intended could result in a hazardous situation.

Battery tool use and care

- ▶ **Recharge only with the charger specified by the manufacturer.** A charger that is suitable for one type of battery pack may create a risk of fire when used with another battery pack.
- ▶ **Use power tools only with specifically designated battery packs.** Use of any other battery packs may create a risk of injury and fire.
- ▶ **When battery pack is not in use, keep it away from other metal objects, like paper clips, coins, keys, nails, screws or other small metal objects, that can make a connection from one terminal to another.** Shorting the battery terminals together may cause burns or a fire.
- ▶ **Under abusive conditions, liquid may be ejected from the battery; avoid contact. If contact accidentally occurs, flush with water. If liquid contacts eyes, additionally seek medical help.** Liquid ejected from the battery may cause irritation or burns.

Service

- ▶ **Have your power tool serviced by a qualified repair person using only identical replacement parts.** This will ensure that the safety of the power tool is maintained.

Hammer Safety Warnings

- ▶ **Wear ear protectors.** Exposure to noise can cause hearing loss.
- ▶ **Use auxiliary handle(s), if supplied with the tool.** Loss of control can cause personal injury.
- ▶ **Hold power tool by insulated gripping surfaces, when performing an operation where the cutting accessory may contact hidden wiring.**Cutting accessory contacting a "live" wire may make exposed metal parts of the power tool "live" and could give the operator an electric shock.
- ▶ **Use suitable detectors to determine if there are hidden supply lines or contact the local utility company for assistance.** Contact with electric cables can cause fire and electric shock. Damaging gas lines can lead to explosion. Breaking water pipes causes property damage.
- ▶ **Always wait until the power tool has come to a complete stop before placing it down.** The application tool can jam and cause you to lose control of the power tool.
- ▶ **Secure the workpiece.** A workpiece clamped with clamping devices or in a vice is held more secure than by hand.
- ▶ **In case of damage and improper use of the battery, vapours may be emitted. The battery can set alight or explode.** Ensure the area is well ventilated and seek medical attention should you experience any adverse effects. The vapours may irritate the respiratory system.
- ▶ **Do not open the battery.** There is a risk of short-circuiting.
- ▶ **The battery can be damaged by pointed objects such as nails or screwdrivers or by force applied externally.** An internal short circuit may occur, causing the battery to burn, smoke, explode or overheat.
- ▶ **Only use the battery with products from the manufacturer.** This is the only way in which you can protect the battery against dangerous overload.



Protect the battery against heat, e.g. against continuous intense sunlight, fire, dirt, water and moisture. There is a risk of explosion and short-circuiting.

- ▶ **Hold the power tool firmly with both hands and make sure you have a stable footing.** The power tool can be more securely guided with both hands.
- ▶ **Caution! When using the power tool with *Bluetooth*®, a fault may occur in other devices and systems, aeroplanes and medical devices (e.g. pacemakers, hearing aids). Also, damage to people and animals in the immediate vicinity cannot be completely excluded. Do not use the power tool with *Bluetooth*® in the vicinity of medical devices, petrol stations, chemical plants, areas with a potentially explosive atmosphere or in blasting areas. Do not use the power tool with *Bluetooth*® in aircraft. Avoid using the product near your body for extended periods.**

The *Bluetooth*® word mark and logos are registered trademarks owned by Bluetooth SIG, Inc. and any use of such marks by Robert Bosch Power Tools GmbH is under license.

Product Description and Specifications



Read all the safety and general instructions. Failure to observe the safety and general instructions may result in electric shock, fire and/or serious injury.

Please observe the illustrations at the beginning of this operating manual.

Intended Use

The power tool is intended for hammer drilling in concrete, masonry and stone, as well as for light and medium difficulty chiselling work.

Power tools with impact action shut-off or drill chucks for straight shank drill bits are also suitable for drilling without impact in wood, metal, ceramic and plastic.

With the *Bluetooth*® Low Energy Module GCY 42 inserted, power tool data and settings can be transferred between the power tool and a mobile device by means of Bluetooth® wireless technology.

Product Features

The numbering of the product features refers to the diagram of the power tool on the graphics page.

(1) Keyless quick-change chuck with integrated impact stop
(2) SDS plus quick-change chuck
(3) SDS plus tool holder
(4) Dust protection cap
(5) Locking sleeve
(6) Locking ring for quick-change chuck
(7) Combi switch for operating modes and clockwise/anticlockwise rotation
(8) Vibration damping
(9) Lock-on button for on/off switch
(10) Handle (insulated gripping surface)
(11) On/off switch
(12) Battery[A)]
(13) Cover for GCY 42 *Bluetooth*® Low Energy Module
(14) Worklight
(15) Button for depth stop adjustment
(16) Auxiliary handle (insulated gripping surface)
(17) Depth stop
(18) Battery release button[A)]
(19) User interface
(20) Drill chuck mounting
(21) Front sleeve of the keyless quick-change chuck
(22) Retaining ring of the keyless quick-change chuck
(23) Battery charge indicator (user interface)
(24) Rapid shut-off indicator (Kickback Control) (user interface)
(25) Working modes indicator (user interface)
(26) Button to select the working mode (user interface)
(27) Power tool status indicator (user interface)
(28) Smartphone indicator (user interface)
(29) Temperature indicator (user interface)

A) **Accessories shown or described are not included with the product as standard. You can find the complete selection of accessories in our accessories range.**

Technical Data

Cordless rotary hammer		GBH 18V-34 CF
Article number		**3 611 J14 0..**
Rated voltage	V=	18
Rated power input	W	750
Impact rate[A)]	min^{-1}	0–2900
Impact energy per stroke according to EPTA-Procedure 05:2016	J	5.8
Rated speed		
– Clockwise	min^{-1}	0–500
– Anticlockwise	min^{-1}	0–500
Tool holder		SDS plus
Spindle collar diameter	mm	74
Max. drilling diameter:		
– Concrete	mm	32
– Masonry (with hollow core bit)	mm	40–82
– Steel	mm	13
– Wood	mm	40
Weight according to EPTA-Procedure 01:2014[A)]	kg	5.2–6.3
Length	mm	430
Height	mm	250
Recommended ambient temperature during charging	°C	0 to +35
Permitted ambient temperature during operation[B)] and during storage	°C	–20 to +50
Compatible rechargeable batteries		GBA 18V... ProCORE18V...
Recommended rechargeable batteries for maximum performance		ProCORE18V... ≥ 5.5 Ah
Recommended battery chargers		GAL 18... GAX 18V... GAL 36...
Data transmission		
Bluetooth®		*Bluetooth*® 4.2 (Low Energy)[C)]
Signal interval	s	8
Max. signal range[D)]	m	30

A) Depends on battery in use
B) Limited performance at temperatures <0 °C
C) The mobile terminal devices must be compatible with *Bluetooth*® Low Energy devices (version 4.2) and support the Generic Access Profile (GAP).
D) The signal range may vary greatly depending on external conditions, including the receiving device used. The *Bluetooth*® range may be significantly weaker inside closed rooms and through metallic barriers (e.g. walls, shelving units, cases, etc.).

Noise/Vibration Information

Noise emission values determined according to **EN 60745-2-6**.

Typically, the A-weighted noise level of the power tool is: Sound pressure level **89** dB(A); sound power level **100** dB(A). Uncertainty K = **3** dB.

Wear hearing protection!

Vibration total values a_h (triax vector sum) and uncertainty K determined according to **EN 60745-2-6**:

Hammer drilling into concrete: a_h = **11** m/s^2, K = **1.5** m/s^2,
Chiselling: a_h = **11** m/s^2, K = **2.8** m/s^2,
Drilling into metal: a_h = **2.5** m/s^2, K = **1.5** m/s^2,

The vibration level given in these instructions has been measured in accordance with a standardised measuring procedure and may be used to compare power tools. It can also be used for a preliminary estimation of exposure to vibration.

The stated vibration level applies to the main applications of the power tool. However, if the power tool is used for different applications, with different application tools or poorly maintained, the vibration level may differ. This can significantly increase the exposure to vibration over the total working period.

To estimate the exposure to vibration accurately, the times when the tool is switched off or when it is running but not actually being used should also be taken into account. This can significantly reduce the exposure to vibration over the total working period.

Implement additional safety measures to protect the operator from the effects of vibration, such as servicing the power tool and application tools, keeping the hands warm, and organising workflows correctly.

Assembly

▶ **Before carrying out any work on the power tool (e.g. maintenance, tool change, etc.) as well as during transport and storage, press the lock-on button to lock the on/off switch.** There is risk of injury from unintentionally pressing the on/off switch.

Using the GCY 42 *Bluetooth*® Low Energy Module

Read the corresponding operating instructions for information about the *Bluetooth*® Low Energy Module **GCY 42**.

Battery Charging

▶ **Use only the chargers listed in the technical data.** Only these chargers are matched to the lithium-ion battery of your power tool.

Note: The battery is supplied partially charged. To ensure full battery capacity, fully charge the battery in the charger before using your power tool for the first time.

The lithium-ion battery can be charged at any time without reducing its service life. Interrupting the charging process does not damage the battery.

The lithium-ion battery is protected against deep discharge by the "Electronic Cell Protection (ECP)". When the battery is discharged, the power tool is switched off by means of a protective circuit: The application tool no longer rotates.

▶ **Do not continue to press the On/Off switch after the power tool has automatically switched off.** The battery can be damaged.

Follow the instructions on correct disposal.

Removing the battery

The battery **(12)** is equipped with two locking levels to prevent the battery from falling out if the battery release button **(18)** is pressed unintentionally. As long as the battery is inserted in the power tool, it is held in position by means of a spring.

– To remove the battery **(12)**, press the release button **(18)** and pull the battery out of the power tool. **Do not use force to do this.**

Battery charge indicator

The green LEDs on the battery charge indicator indicate the state of charge of the battery. For safety reasons, it is only possible to check the state of charge when the power tool is not in operation.

Press the button for the battery charge indicator On or to show the state of charge. This is also possible when the battery is removed.

If no LED lights up after pressing the button for the battery charge indicator, then the battery is defective and must be replaced.

Note: The state of charge of the battery is also displayed on the user interface **(19)** Status indications.

Battery model GBA 18V...



LEDs	Capacity
3× continuous green light	60–100 %
2× continuous green light	30–60 %
1× continuous green light	5–30 %
1× flashing green light	0–5 %

Battery model ProCORE18V...



LEDs	Capacity
5× continuous green light	80–100 %
4× continuous green light	60–80 %
3× continuous green light	40–60 %
2× continuous green light	20–40 %
1× continuous green light	5–20 %
1× flashing green light	0–5 %

Auxiliary handle

▶ **Do not operate your power tool without the auxiliary handle (16).**

Swivelling the auxiliary handle (see figure A)

You can swivel the auxiliary handle **(16)** to any angle for a safe work posture that minimises fatigue.

– Turn the lower gripping end of the auxiliary handle **(16)** anticlockwise and swivel the auxiliary handle **(16)** into the required position. Then turn the lower gripping end of the auxiliary handle **(16)** clockwise to retighten it.

Make sure that the retaining strap of the auxiliary handle slots into the corresponding groove of the housing.

Setting the drilling depth (see figure B)

You can use the depth stop **(17)** to set the required drilling depth **X**.

– Press the button for depth stop adjustment **(15)** and insert the depth stop into the auxiliary handle **(16)**. The fluting on the depth stop **(17)** must face downwards.
– Push the SDS plus application tool into the SDS plus tool holder **(3)** as far as it will go. Otherwise, the movability of the SDS-plus drilling tool can lead to incorrect adjustment of the drilling depth.
– Pull the depth stop far enough out that the distance between the drill bit tip and the edge of the depth stop corresponds to the required drilling depth **X**.

Selecting drill chucks and tools

For hammer drilling and chiselling, you will need SDS plus tools, which insert into the SDS plus drill chuck.

For drilling without impact in wood, metal, ceramic and plastic as well as for screwdriving, tools without SDS plus are used (e.g. cylindrical shank drill bits). For these tools, you will need the keyless quick-change chuck **(1)** with integrated impact stop.

Note: Using the keyless quick-change chuck **(1)** with integrated impact stop is the only way to ensure that the tools inserted are not damaged.

Removing/inserting the quick-change chuck

Removing the Quick-Change Chuck (see figure C)

– Pull back on the quick-change chuck locking ring **(6)**, hold it in this position and pull the SDS plus quick-change chuck **(2)** or the keyless quick-change chuck **(1)** out from the front.
– Once the quick-change chuck is removed, protect it from dirt.

Inserting the Quick-Change Chuck (see figure D)

– Before insertion, clean the quick-change chuck and lightly grease the shank.
– Wrap your whole hand around the SDS plus quick-change chuck **(2)** or the keyless quick-change chuck **(1)**. Use a turning motion to push the quick-change chuck into the drill chuck holder **(20)** until you hear it click into place.
– The quick-change chuck is automatically locked. Check that it is locked by pulling on the quick-change chuck.

Changing the Tool

The dust protection cap **(4)** largely prevents the penetration of drilling dust into the tool holder during operation. When inserting the tool, make sure that the dust protection cap **(4)** does not become damaged.

▶ **Replace a damaged dust protection cap immediately. It is recommended that you have use an after-sales service for this.**

Changing the tool (SDS plus)

Inserting the SDS plus application tool (see figure E)

The SDS-plus drill chuck enables you to change the application tool easily and conveniently without needing to use additional tools.

– Insert the SDS plus quick-change chuck **(2)**.
– Clean and lightly grease the shank of the application tool.
– Insert the application tool into the tool holder while turning it until it locks automatically.
– Check that it is locked by pulling on the tool.

As a requirement of the system, the SDS-plus application tool can move freely. This causes a certain radial run-out at no-load, which has no effect on the accuracy of the drill hole, as the drill bit centres itself upon drilling.

Removing SDS-plus application tools (see figure F)

– Push the locking sleeve **(5)** back and remove the application tool.

Changing the tool (without SDS plus)

Inserting the Application Tool (see figure G)

Note: Application tools that do not have SDS plus must not be used for hammer drilling or chiselling. Tools without SDS plus and their drill chucks are damaged by hammer drilling or chiselling.

– Insert the keyless quick-change chuck **(1)** with integrated impact stop.

Note: Only use the keyless quick-change chuck with integrated impact stop specifically designed for the **GBH 18V-34 CF**. Using this drill chuck is the only way to ensure that the pneumatic impact mechanism of the rotary hammer does not damage the application tools.

– Hold the retaining ring **(22)** of the keyless quick-change chuck firmly in place. Open the tool holder by turning the front sleeve **(21)** until the tool can be inserted. Hold the retaining ring **(22)** in place and firmly tighten the front sleeve **(21)** by turning it in the direction of the arrow until you hear it click into place.
– Check that it is seated securely by pulling on the tool.

Note: If the tool holder was unscrewed all the way, a scraping sound may be heard while retightening the tool holder and it may not fully tighten.

In this case, turn the front sleeve **(21)** in the opposite direction to the arrow by one full turn. This will allow the tool holder to be fully tightened.

– Turn the combi switch **(7)** to the "drilling" position.

Removing the application tool (see figure H)

– Hold the retaining ring **(22)** of the keyless quick-change chuck firmly in place. Open the tool holder by turning the front sleeve **(21)** in the direction of the arrow until the tool can be removed.

Dust/Chip Extraction

The dust from materials such as lead paint, some types of wood, minerals and metal can be harmful to human health.

Touching or breathing in this dust can trigger allergic reactions and/or cause respiratory illnesses in the user or in people in the near vicinity.
Certain dusts, such as oak or beech dust, are classified as carcinogenic, especially in conjunction with wood treatment additives (chromate, wood preservative). Materials containing asbestos may only be machined by specialists.

- Use a dust extraction system that is suitable for the material wherever possible.
- Provide good ventilation at the workplace.
- It is advisable to wear a P2 filter class breathing mask.

The regulations on the material being machined that apply in the country of use must be observed.

▶ **Avoid dust accumulation at the workplace.** Dust can easily ignite.

Operation

Start-up

▶ Ensure that the cover **(13)** of the *Bluetooth*® Low Energy Module GCY 42 is closed during operation. This will prevent dust from getting in.

Inserting the Battery

▶ **Use only original Bosch lithium-ion batteries with the voltage stated on the type plate of your power tool.** Using other batteries can lead to injuries and pose a fire hazard.

- Push the lock-on button **(9)** to protect the power tool against accidental switching on.
- Slide the charged battery **(12)** into the power tool until the battery is securely locked.

Setting the Operating Mode (see figure I)

You can use the combi switch **(7)** to select the operating mode of the power tool.

Note: Only change the operating mode when the power tool is switched off. Otherwise, the power tool may become damaged.

Note: If you switch to a different operating mode while the on/off switch is locked, the power tool will switch off.

- To change the operating mode, turn the combi switch **(7)** to the required position until you hear it click into place.

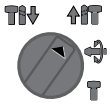

Position for **hammer drilling** into concrete or stone

GBH 18V-34 CF with keyless quick-change chuck **(1)**: Position for **drilling** without impact in wood, metal, ceramic and plastic **(clockwise)**

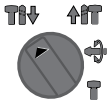

Anti-clockwise position for loosening the application tool from the workpiece

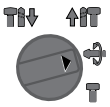

Vario-Lock position for changing the chiselling position.

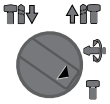

Position for **chiselling**

Switching On/Off

- If necessary, release the lock-on button **(9)** for the on/off switch.
- To **switch on** the power tool, press the on/off switch **(11)**.

The lamp lights up when the on/off switch **(11)** is lightly or fully pressed, meaning that the work area is illuminated in poor lighting conditions.

- To **switch off** the power tool, release the on/off switch **(11)**.

Adjusting the Speed/Impact Rate

You can adjust the speed/impact rate of the power tool when it is on by pressing in the on/off switch **(11)** to varying extents.

Applying light pressure to the on/off switch **(11)** results in a low rotational speed/impact rate. Applying increasing pressure to the switch increases the speed/impact rate.

You can also control the speed on the user interface and/or via a smartphone app (see "Selecting the working mode", page 13).

Changing the chiselling position (Vario-Lock)

You can lock the chisel in **16** different positions, so you can select the optimum working position for each task.

- Insert the chisel into the tool holder.
- Turn the combi switch **(7)** to the "Vario-Lock" position.
- Turn the application tool to the required chisel position.
- Turn the combi switch **(7)** to the "chiselling" position. With this, the tool holder is locked.

Chiselling with lock function

To chisel for extended periods without pressing the on/off switch **(11)**, lock the on/off switch in "chiselling" operating mode.

- To **lock** the power tool, press the on/off switch **(11)** down fully whilst simultaneously pressing the lock-on switch **(9)**.
- To switch the lock off, press the lock-on button **(9)** again.

Note: If you switch to a different operating mode while the on/off switch is locked, the power tool will switch off.

Overload clutch

▶ **If the application tool jams or snags, the power transmission to the drill spindle will be interrupted. Always hold the power tool firmly with both hands to withstand the forces this may create and adopt a position with stable footing.**

▶ **Switch the power tool off immediately and remove the application tool if the power tool becomes blocked. Switching on when the drilling tool is blocked may cause high torque reactions.**

Rapid shut-off (KickBack Control)



The rapid shut-off function (KickBack Control) gives the user greater control over the power tool and offers them better protection than power tools that do not have KickBack Control. If the power tool suddenly and unforeseeably rotates around the drilling axis, it will switch off and the rapid shut-off indicator **(24)** will light up and the worklight **(14)** will flash. When rapid shut-off is activated, the status indicator **(27)** flashes red.

– To **switch the tool back on**, release the on/off switch **(11)** and then press it again.

Electronic Precision Control (EPC)

EPC assists you when working with impact by ensuring slow start-up of the operating speed for precise working.

Adaptive Speed Control in "Chiselling" Operating Mode



For better control and precise positioning, the power tool starts at a low speed and then quickly increases to the maximum speed.
Adapted Speed Control is started up automatically when the power tool is switched on.

User Interface (see figure J)

The user interface **(19)** is used to select the working mode and to indicate the status of the power tool.

Status indications

Battery charge indicator (user interface) (23)	Meaning/cause	Solution
Green (2 to 5 bars)	Battery charged	–
Yellow (1 bar)	Battery almost empty	Replace or charge battery soon
Red (1 bar)	Battery empty	Replace or charge battery

Temperature indicator (29)	Meaning/cause	Solution
Yellow	Operating temperature of the battery or the power tool has significantly increased, performance is reduced	Run the power tool at no load and allow it to cool down or replace the overheated battery
Red	Operating temperature of the battery or the power tool has been exceeded, power tool switches itself off as a precautionary measure	Leave the power tool to cool down or replace overheated batteries

Power tool status indicator (27)	Meaning/cause	Solution
Green	Status OK	–
Yellow	Critical temperature has been reached or battery is almost empty	Run the power tool at no load and allow it to cool down, or replace or charge the battery soon
Red	Power tool has overheated or battery is empty	Allow the power tool to cool down, or replace or charge the battery
Red	Lock-on button pressed in "hammer drilling" operating mode	Press the lock-on button again
	Combi-switch activated during operation	Turn the power tool off and on again
	Motor is jammed, battery too weak	Charge the battery or use the recommended battery type
	General error	– Switch the power tool off and on again, or remove the battery and reinsert it If the error persists: – Send the power tool to the after-sales service
Flashing red	Rapid shut-off is triggered	Turn the power tool off and on again

Power tool status indicator (27)	Meaning/cause	Solution
– In combination with the rapid shut-off indicator **(24)**		
Flashing blue	Power tool is connected to a mobile device or settings are being transferred	–

Smartphone status indicator (28)	Meaning/cause	Solution
Green	Additional information available (e.g. commercial information)	If you are interested in this, read the message on the smartphone
Yellow	Important information available (e.g. temperature warning)	Read the message on the smartphone
Red	Operation-critical information available (e.g. engine stop due to an error in the microntroller unit)	Read the message on the smartphone immediately

Selecting the working mode

– Press the **(26)** button for selecting the working mode repeatedly until the working mode you require lights up.

Note: In **Favorite** working mode, the functions are configured via the smartphone app, while the functions are preset in **Auto** and **Soft** working modes.

Working mode (25) indicator	Functions
Auto lights up	In **Auto** working mode, the power tool reaches maximum performance. – "Hammer drilling" operating mode: Rapid increase in speed for controlled drilling up to 100 % of the maximum speed – "Chiselling" operating mode: Adaptive Speed Control – Rapid shut-off (KickBack control)
Soft lights up	**Soft** operating mode is used to machine delicate materials. – "Hammer drilling" operating mode: EPC active, slow increase in speed for soft starts up to 80 % of the maximum speed for hammer drilling in sensitive surfaces – "Chiselling" operating mode: Adaptive Speed Control with an even more sensitive setup – Rapid shut-off (KickBack control) with an even more sensitive setup
Favorite lights up	In **Favorite** working mode, the power tool can be individually configured via a smartphone app. – "Hammer drilling" operating mode can be configured in several steps: Power via speed Electronic Precision Control (EPC) via start-up speed – "Chiselling" operating mode: Adaptive Speed Control can be switched on and off – Sensitivity of rapid shut-off (KickBack control) until switch-off can be configured

Connectivity functions

In conjunction with the GCY 42 *Bluetooth*® Low Energy Module, the following connectivity functions are available for the power tool:

– Registration and personalisation
– Status check, output of warning messages
– General information and settings
– Management

Read the corresponding operating instructions for information about the *Bluetooth*® Low Energy Module **GCY 42**.

The smartphone indicator **(28)** lights up if the power tool sends information (e.g. a temperature warning) to a mobile device via *Bluetooth*® wireless technology.

Practical Advice

▶ **With the *Bluetooth*® Low Energy Module GCY 42, the power tool is equipped with a radio interface. Local operating restrictions, e.g. in aircraft or hospitals, must be observed.**

▶ **In areas where the *Bluetooth*® wireless technology is not allowed to be used, the *Bluetooth*® Low Energy Module GCY 42 and the button cell must be removed.**

Note: The cover **(13)** can only be securely closed if the *Bluetooth*® Low Energy Module GCY 42 and the button cell are situated in the power tool.

– To **deactivate** the *Bluetooth*® Low Energy Module GCY 42, rotate the button cell or place means of insulation between the button cell and *Bluetooth*® Low Energy Module GCY 42.
– Close the cover **(13)** to prevent dirt from getting in.

Vibration damping

Vibration Control The integrated vibration damping function reduces the generated vibration.

▶ **Do not continue to use the power tool if the damping element is damaged.**

Recommendations for Optimal Handling of the Battery

Protect the battery against moisture and water.

Only store the battery within a temperature range of –20 to 50 °C. Do not leave the battery in your car in the summer, for example.

Occasionally clean the ventilation slots on the battery using a soft brush that is clean and dry.

A significantly reduced operating time after charging indicates that the battery has deteriorated and must be replaced.

Follow the instructions on correct disposal.

Maintenance and Service

Maintenance and Cleaning

▶ **Remove the battery from the power tool before carrying out work on the power tool (e.g. maintenance, changing tool, etc.). The battery should also be removed for transport and storage.** There is risk of injury from unintentionally pressing the on/off switch.

▶ **To ensure safe and efficient operation, always keep the power tool and the ventilation slots clean.**

▶ **Replace a damaged dust protection cap immediately. It is recommended that you have use an after-sales service for this.**

– Clean the tool holder **(3)** after each use.
– Clean the tool holder after each use.

After-Sales Service and Application Service

Our after-sales service responds to your questions concerning maintenance and repair of your product as well as spare parts. You can find explosion drawings and information on spare parts at: **www.bosch-pt.com**
The Bosch product use advice team will be happy to help you with any questions about our products and their accessories.

In all correspondence and spare parts orders, please always include the 10-digit article number given on the nameplate of the product.

Cambodia
Robert Bosch (Cambodia) Co., Ltd
Unit 8BC, GT Tower, 08th Floor, Street 169,
Czechoslovakia Blvd, Sangkat Veal Vong
Khan 7 Makara, Phnom Penh
VAT TIN: 100 169 511
Tel.: +855 23 900 685
Tel.: +855 23 900 660
www.bosch.com.kh

People's Republic of China
China Mainland
Bosch Power Tool (China) Co. Ltd.
Bosch Service Center
567, Bin Kang Road
Bin Kang District
Hangzhou, Zhejiang Province
China 310052
Tel.: (0571) 8887 5566 / 5588
Fax: (0571) 8887 6688 x 5566# / 5588#
E-Mail: bsc.hz@cn.bosch.com
www.bosch-pt.com.cn

HK and Macau Special Administrative Regions
Robert Bosch Co. Ltd.
21st Floor, 625 King's Road
North Point, Hong Kong
Customer Service Hotline: +852 2101 0235
Fax: +852 2590 9762
E-Mail: info@hk.bosch.com
www.bosch-pt.com.hk

India
Bosch Service Center
69, Habibullah Road, (Next to PSBB School), T. Nagar
Chennai–600077
Phone: (044) 64561816

Bosch Service Center
18, Community Center
Phase 1, Mayapuri
New Delhi–110064
Phone: (011) 43166190

Indonesia
PT Robert Bosch
Palma Tower 10th Floor
Jalan RA Kartini II-S Kaveling 6
Pondok Pinang, Kebayoran Lama
Jakarta Selatan 12310
Tel.: (21) 3005-5800
www.bosch-pt.co.id

Malaysia
Robert Bosch Sdn. Bhd.(220975-V) PT/SMY
No. 8A, Jalan 13/6
46200 Petaling Jaya
Selangor
Tel.: (03) 79663194
Toll-Free: 1800 880188
Fax: (03) 79583838
E-Mail: kiathoe.chong@my.bosch.com
www.bosch-pt.com.my

Pakistan
Robert Bosch Middle East FZE – Pakistan Liaison Office
2nd Floor Plaza # 10, CCA Block, DHA Phase 5
Lahore, 54810
Phone: +92(303)4444311
Email: Faisal.Khan@bosch.com

Philippines
Robert Bosch, Inc.
28th Floor Fort Legend Towers,
3rd Avenue corner 31st Street,
Fort Bonifacio, Global City,
1634 Taguig City
Tel.: (632) 8703871
Fax: (632) 8703870
www.bosch-pt.com.ph

Singapore
Powerwell Service Centre Ptd Ltd
Bosch Authorised Service Centre (Power Tools)
4012 Ang Mo Kio Ave 10, #01-02 TECHplace
Singapore 569628
Tel.: 6452 1770
Fax: 6452 1760
E-Mail: ask@powerwellsc.com
www.powerwellsc.com
www.bosch-pt.com.sg

Thailand
Robert Bosch Ltd.
FYI Center Tower 1, 5th Floor,
2525 Rama IV Road, Klongtoei,
Bangkok 10110
Tel.: 02 0128888
Fax: 02 0645802
www.bosch.co.th

Bosch Service – Training Centre
La Salle Tower Ground Floor Unit No.2
10/11 La Salle Moo 16
Srinakharin Road
Bangkaew, Bang Plee
Samutprakarn 10540
Tel.: 02 7587555
Fax: 02 7587525

Vietnam
Branch of Bosch Vietnam Co., Ltd in HCMC
14th floor, Deutsches Haus, 33 Le Duan
Ben Nghe Ward, District 1, Ho Chi Minh City
Tel.: (028) 6258 3690
Fax: (028) 6258 3692 - 6258 3694
Hotline: (028) 6250 8555
Email: tuvankhachhang-pt@vn.bosch.com
www.bosch-pt.com.vn

Bahrain
EA Juffali and Brothers for Technical Equipment Company.
Kingdom of Bahrain, Al Aker - Block 0624 - Road 2403 - Building 0055D
Phone: +97317704537
Fax: +973177045257
Email: h.berjas@eajb.com.sa

Egypt
RBEG-LLC
22 Kamal Eldin Hussein
Sheraton Heliopolis
11799 Cairo
E-mail: boschegypt.powertools@eg.bosch.com

Iran
Robert Bosch Iran
3rd Floor, No 3, Maadiran Building
Aftab St., Khodami St., Vanak Sq.
Tehran 1994834571
Phone: +9821- 86092057

Iraq
Sahba Technology Group
Al Muthana airport road
Baghdad
Phone Bagdad: +964 (0) 7 901 930366
Phone Dubai: +971 (0) 4 422 1898
Email: duraid@sahbatechnology.com

Jordan
Roots Arabia – Jordan
Al-Hurriyah Street, Al-Muqabalein
Amman 11623, Jordan
P.O. Box: 110068
Tel. : +962 6 4398990
E-mail: bosch@rootsjordan.com

Kuwait
Shuwaikh Industrial Area, Block 1, Plot 16, Street 3rd
P.O. Box 164 – Safat 13002
Phone: +965 - 2496 88 88
Fax: +965 - 2481 08 79
E-mail: josephkr@aaalmutawa.com

Lebanon
Tehini Hana & Co. S.A.R.L.
P.O. Box 90-449
Jdeideh 1202 2040
Dora-Beirut
Phone: +9611255211
Email: service-pt@tehini-hana.com

Libya
El Naser for Workshop Tools
Swanee Road, Alfalah Area
Tripoli
Phone: +218 21 4811184

Oman
Malatan Trading & Contracting LLC
P.O. Box 131, Ruwi, Muscat
Postal Code: 112, Sultanate of Oman
Phone: +968 2479 4035/4089/4901
Mob: +968-91315465
Fax: +968 2479 4058
E-Mail: sudhirkumar@malatan.net

Qatar
International Construction Solutions W L L
P. O. Box 51, Doha
Phone: +974 40065458

Fax: +974 4453 8585
Email: csd@icsdoha.com

Saudi Arabia
Juffali Technical Equipment Co. (JTECO)
P.O.Box: 1049 – Jeddah 21431 – KSA
Jeddah: 00966 (0) 12 692 0770 – Ext 433
Riyadh: 00966 (0) 11 409 3976 – Ext-30/34/39
Dammam: 00966 (0) 13 833 9565
E-mail: M.Zreik@eajb.com.sa

Syria
Dallal Establishment for Power Tools
Damascus. Baramkeh street - Ibn Amer street,
Phone: +963112241006 or 009631122414009
Mobile: 00963991141005
Email: rita.dallal@hotmail.com

United Arab Emirates
Central Motors & Equipment,
P.O. Box 26255, Dubai
Dubai: 00971 (0) 4 3090920/3090930
Abu Dhabi: 00971 (0) 2 4017745
Sharjah: 00971 (0) 6 5932777
Al Ain: 00971 (0) 3 7157419
E- Mail: Mallappa.Madari@centralmotors.ae

Yemen
Abu Alrejal Trading Corporation
P.O. Box : 17024 , Zubeiry St.
Sana'a, Yemen
Tel: +967-1-20 20 10
Fax: +967-1-47 19 17
E-mail: tech-tools@abualrejal.com/yahya@abualrejal.com

Ethiopia
Forever plc
Kebele 2,754, BP 4806,
Addis Ababa
Phone: +251 111 560 600
Email: foreverplc@ethionet.et

Ghana
Robert Bosch Ghana Limited
21 Kofi Annan Road Airport Residential Area Accra
Tel. +233 (0)3027 94616

Kenya
Robert Bosch East Africa Ltd
Mpaka Road P.O. Box 856
00606 Nairobi

Nigeria
Robert Bosch Nigeria Ltd.
52–54 Isaac John Street P.O. Box
GRA Ikeja – Lagos

Tanzania
Diesel & Autoelectric Service Ltd.
117 Nyerere Rd., P.O. Box 70839
Vingunguti 12109, Dar Es Salaam
Phone: +255 222 861 793/794

Republic of South Africa
Customer service
Hotline: (011) 6519600
Gauteng – BSC Service Centre
35 Roper Street, New Centre
Johannesburg
Tel.: (011) 4939375
Fax: (011) 4930126
E-Mail: bsctools@icon.co.za
KZN – BSC Service Centre
Unit E, Almar Centre
143 Crompton Street
Pinetown
Tel.: (031) 7012120
Fax: (031) 7012446
E-Mail: bsc.dur@za.bosch.com
Western Cape – BSC Service Centre
Democracy Way, Prosperity Park
Milnerton
Tel.: (021) 5512577
Fax: (021) 5513223
E-Mail: bsc@zsd.co.za
Bosch Headquarters
Midrand, Gauteng
Tel.: (011) 6519600
Fax: (011) 6519880
E-Mail: rbsa-hq.pts@za.bosch.com

Transport

The contained lithium-ion batteries are subject to the Dangerous Goods Legislation requirements. The batteries are suitable for road-transport by the user without further restrictions.

When shipping by third parties (e.g.: by air transport or forwarding agency), special requirements on packaging and labelling must be observed. For preparation of the item being shipped, consulting an expert for hazardous material is required.

Dispatch battery packs only when the housing is undamaged. Tape or mask off open contacts and pack up the battery in such a manner that it cannot move around in the packaging. Please also observe the possibility of more detailed national regulations.

Disposal



Power tools, rechargeable batteries, accessories and packaging should be sorted for environmental-friendly recycling.



Do not dispose of power tools and batteries/rechargeable batteries into household waste!

Battery packs/batteries:

Li-ion:

Please observe the notes in the section on transport (see "Transport", page 16).

Français

Consignes de sécurité

Avertissements de sécurité généraux pour l'outil

⚠ AVERTISSEMENT **Lire tous les avertissements de sécurité et toutes les instructions.** Ne pas suivre les avertissements et instructions peut donner lieu à un choc électrique, un incendie et/ou une blessure sérieuse.

Conserver tous les avertissements et toutes les instructions pour pouvoir s'y reporter ultérieurement.

Le terme «outil» dans les avertissements fait référence à votre outil électrique alimenté par le secteur (avec cordon d'alimentation) ou votre outil fonctionnant sur batterie (sans cordon d'alimentation).

Sécurité de la zone de travail

- **Conserver la zone de travail propre et bien éclairée.** Les zones en désordre ou sombres sont propices aux accidents.
- **Ne pas faire fonctionner les outils électriques en atmosphère explosive, par exemple en présence de liquides inflammables, de gaz ou de poussières.** Les outils électriques produisent des étincelles qui peuvent enflammer les poussières ou les fumées.
- **Maintenir les enfants et les personnes présentes à l'écart pendant l'utilisation de l'outil.** Les distractions peuvent vous faire perdre le contrôle de l'outil.

Sécurité électrique

- **Il faut que les fiches de l'outil électrique soient adaptées au socle. Ne jamais modifier la fiche de quelque façon que ce soit. Ne pas utiliser d'adaptateurs avec des outils à branchement de terre.** Des fiches non modifiées et des socles adaptés réduiront le risque de choc électrique.
- **Eviter tout contact du corps avec des surfaces reliées à la terre telles que les tuyaux, les radiateurs, les cuisinières et les réfrigérateurs.** Il existe un risque accru de choc électrique si votre corps est relié à la terre.
- **Ne pas exposer les outils à la pluie ou à des conditions humides.** La pénétration d'eau à l'intérieur d'un outil augmentera le risque de choc électrique.
- **Ne pas maltraiter le cordon. Ne jamais utiliser le cordon pour porter, tirer ou débrancher l'outil. Maintenir le cordon à l'écart de la chaleur, du lubrifiant, des arêtes ou des parties en mouvement.** Des cordons endommagés ou emmêlés augmentent le risque de choc électrique.
- **Lorsqu'on utilise un outil à l'extérieur, utiliser un prolongateur adapté à l'utilisation extérieure.** L'utilisation d'un cordon adapté à l'utilisation extérieure réduit le risque de choc électrique.
- **Si l'usage d'un outil dans un emplacement humide est inévitable, utiliser une alimentation protégée par un dispositif à courant différentiel résiduel (RCD).** L'usage d'un RCD réduit le risque de choc électrique.

Sécurité des personnes

- **Rester vigilant, regarder ce que vous êtes en train de faire et faire preuve de bon sens dans votre utilisation de l'outil. Ne pas utiliser un outil lorsque vous êtes fatigué ou sous l'emprise de drogues, d'alcool ou de médicaments.** Un moment d'inattention en cours d'utilisation d'un outil peut entraîner des blessures graves des personnes.
- **Utiliser un équipement de sécurité. Toujours porter une protection pour les yeux.** Les équipements de sécurité tels que les masques contre les poussières, les chaussures de sécurité antidérapantes, les casques ou les protections acoustiques utilisés pour les conditions appropriées réduiront les blessures de personnes.
- **Eviter tout démarrage intempestif. S'assurer que l'interrupteur est en position arrêt avant de brancher l'outil au secteur et/ou au bloc de batteries, de le ramasser ou de le porter.** Porter les outils en ayant le doigt sur l'interrupteur ou brancher des outils dont l'interrupteur est en position marche est source d'accidents.
- **Retirer toute clé de réglage avant de mettre l'outil en marche.** Une clé laissée fixée sur une partie tournante de l'outil peut donner lieu à des blessures de personnes.
- **Ne pas se précipiter. Garder une position et un équilibre adaptés à tout moment.** Cela permet un meilleur contrôle de l'outil dans des situations inattendues.
- **S'habiller de manière adaptée. Ne pas porter de vêtements amples ou de bijoux. Garder les cheveux, les vêtements et les gants à distance des parties en mouvement.** Des vêtements amples, des bijoux ou les cheveux longs peuvent être pris dans des parties en mouvement.
- **Si des dispositifs sont fournis pour le raccordement d'équipements pour l'extraction et la récupération des poussières, s'assurer qu'ils sont connectés et correctement utilisés.** Utiliser des collecteurs de poussière peut réduire les risques dus aux poussières.

Utilisation et entretien de l'outil

- **Ne pas forcer l'outil. Utiliser l'outil adapté à votre application.** L'outil adapté réalisera mieux le travail et de manière plus sûre au régime pour lequel il a été construit.
- **Ne pas utiliser l'outil si l'interrupteur ne permet pas de passer de l'état de marche à arrêt et vice versa.** Tout outil qui ne peut pas être commandé par l'interrupteur est dangereux et il faut le réparer.
- **Débrancher la fiche de la source d'alimentation en courant et/ou le bloc de batteries de l'outil avant tout réglage, changement d'accessoires ou avant de ranger l'outil.** De telles mesures de sécurité préventives réduisent le risque de démarrage accidentel de l'outil.
- **Conserver les outils à l'arrêt hors de la portée des enfants et ne pas permettre à des personnes ne connaissant pas l'outil ou les présentes instructions de le faire fonctionner.** Les outils sont dangereux entre les mains d'utilisateurs novices.

- ▶ **Observer la maintenance de l'outil. Vérifier qu'il n'y a pas de mauvais alignement ou de blocage des parties mobiles, des pièces cassées ou toute autre condition pouvant affecter le fonctionnement de l'outil. En cas de dommages, faire réparer l'outil avant de l'utiliser.** De nombreux accidents sont dus à des outils mal entretenus.
- ▶ **Garder affûtés et propres les outils permettant de couper.** Des outils destinés à couper correctement entretenus avec des pièces coupantes tranchantes sont moins susceptibles de bloquer et sont plus faciles à contrôler.
- ▶ **Utiliser l'outil, les accessoires et les lames etc., conformément à ces instructions, en tenant compte des conditions de travail et du travail à réaliser.** L'utilisation de l'outil pour des opérations différentes de celles prévues pourrait donner lieu à des situations dangereuses.

Utilisation des outils fonctionnant sur batteries et précautions d'emploi

- ▶ **Ne recharger qu'avec le chargeur spécifié par le fabricant.** Un chargeur qui est adapté à un type de bloc de batteries peut créer un risque de feu lorsqu'il est utilisé avec un autre type de bloc de batteries.
- ▶ **N'utiliser les outils qu'avec des blocs de batteries spécifiquement désignés.** L'utilisation de tout autre bloc de batteries peut créer un risque de blessure et de feu.
- ▶ **Lorsqu'un bloc de batteries n'est pas utilisé, le maintenir à l'écart de tout autre objet métallique, par exemple trombones, pièces de monnaie, clés, clous, vis ou autres objets de petite taille qui peuvent donner lieu à une connexion d'une borne à une autre.** Le court-circuitage des bornes d'une batterie entre elles peut causer des brûlures ou un feu.
- ▶ **Dans de mauvaises conditions, du liquide peut être éjecté de la batterie; éviter tout contact. En cas de contact accidentel, nettoyer à l'eau. Si le liquide entre en contact avec les yeux, rechercher en plus une aide médicale.** Le liquide éjecté des batteries peut causer des irritations ou des brûlures.

Maintenance et entretien

- ▶ **Faire entretenir l'outil par un réparateur qualifié utilisant uniquement des pièces de rechange identiques.** Cela assurera que la sécurité de l'outil est maintenue.

Avertissements de sécurité pour les marteaux

- ▶ **Porter des protections auditives.** L'exposition aux bruits peut provoquer une perte de l'audition.
- ▶ **Utiliser la(les) poignée(s) auxiliaire(s) fournie(s) avec l'outil.** La perte de contrôle peut provoquer des blessures.
- ▶ **Tenir l'outil par les surfaces de préhension isolées, lors de la réalisation d'une opération au cours de laquelle l'organe de coupe peut entrer en contact avec un câblage non apparent.**Le contact avec un fil "sous tension" peut également mettre "sous tension" les parties métalliques exposées de l'outil électrique et provoquer un choc électrique sur l'opérateur.
- ▶ **Utilisez un détecteur approprié pour vérifier s'il n'y a pas de conduites cachées ou contactez votre société de distribution d'eau locale.** Tout contact avec des câbles électriques peut provoquer un incendie ou un choc électrique. Tout endommagement d'une conduite de gaz peut provoquer une explosion. La perforation d'une conduite d'eau provoque des dégâts matériels.
- ▶ **Avant de poser l'outil électroportatif, attendez que celui-ci soit complètement à l'arrêt.** L'outil risque de se coincer, ce qui entraînerait une perte de contrôle de l'outil électroportatif.
- ▶ **Bloquez la pièce à travailler.** Une pièce à travailler serrée par des dispositifs de serrage appropriés ou dans un étau est fixée de manière plus sûre que quand elle est tenue avec une main.
- ▶ **Si l'accu est endommagé ou utilisé de manière non conforme, des vapeurs peuvent s'échapper. L'accu peut brûler ou exploser.** Ventilez le local et consultez un médecin en cas de malaise. Les vapeurs peuvent entraîner des irritations des voies respiratoires.
- ▶ **N'ouvrez pas l'accu.** Risque de court-circuit.
- ▶ **Les objets pointus comme un clou ou un tournevis et le fait d'exercer une force extérieure sur le boîtier risque d'endommager l'accu.** Il peut en résulter un court-circuit interne et l'accu risque de s'enflammer, de dégager des fumées, d'exploser ou de surchauffer.
- ▶ **N'utilisez l'accu qu'avec des produits du fabricant.** Tout risque de surcharge dangereuse sera alors exclu.





Conservez la batterie à l'abri de la chaleur, en la protégeant p. ex. de l'ensoleillement direct, du feu, de la saleté, de l'eau et de l'humidité. Il existe un risque d'explosion et de courts-circuits.

- ▶ **Lors du travail, tenez fermement l'outil électroportatif des deux mains et veillez à toujours garder une position de travail stable.** Avec les deux mains, l'outil électroportatif est guidé en toute sécurité.
- ▶ **Attention ! En cas d'utilisation de l'outil électroportatif en mode** *Bluetooth*, **les ondes émises risquent de perturber le fonctionnement de certains appareils et installations ainsi que le fonctionnement des avions et des appareils médicaux (par ex. stimulateurs cardiaques, prothèses auditives). Les ondes émises peuvent aussi avoir un effet nocif sur les personnes et les animaux qui se trouvent à proximité immédiate de l'outil. N'utilisez pas l'outil électroportatif en mesure en mode** *Bluetooth* **à proximité d'appareils médicaux, de stations-service, d'usines chimiques et lorsque vous vous trouvez dans des zones à risque d'explosion ou dans des zones de dynamitage. N'utilisez pas l'outil électroportatif en mode** *Bluetooth*® **dans des avions. Évitez une utilisation prolongée de l'outil très près du corps.**