BLACK&DECKER®

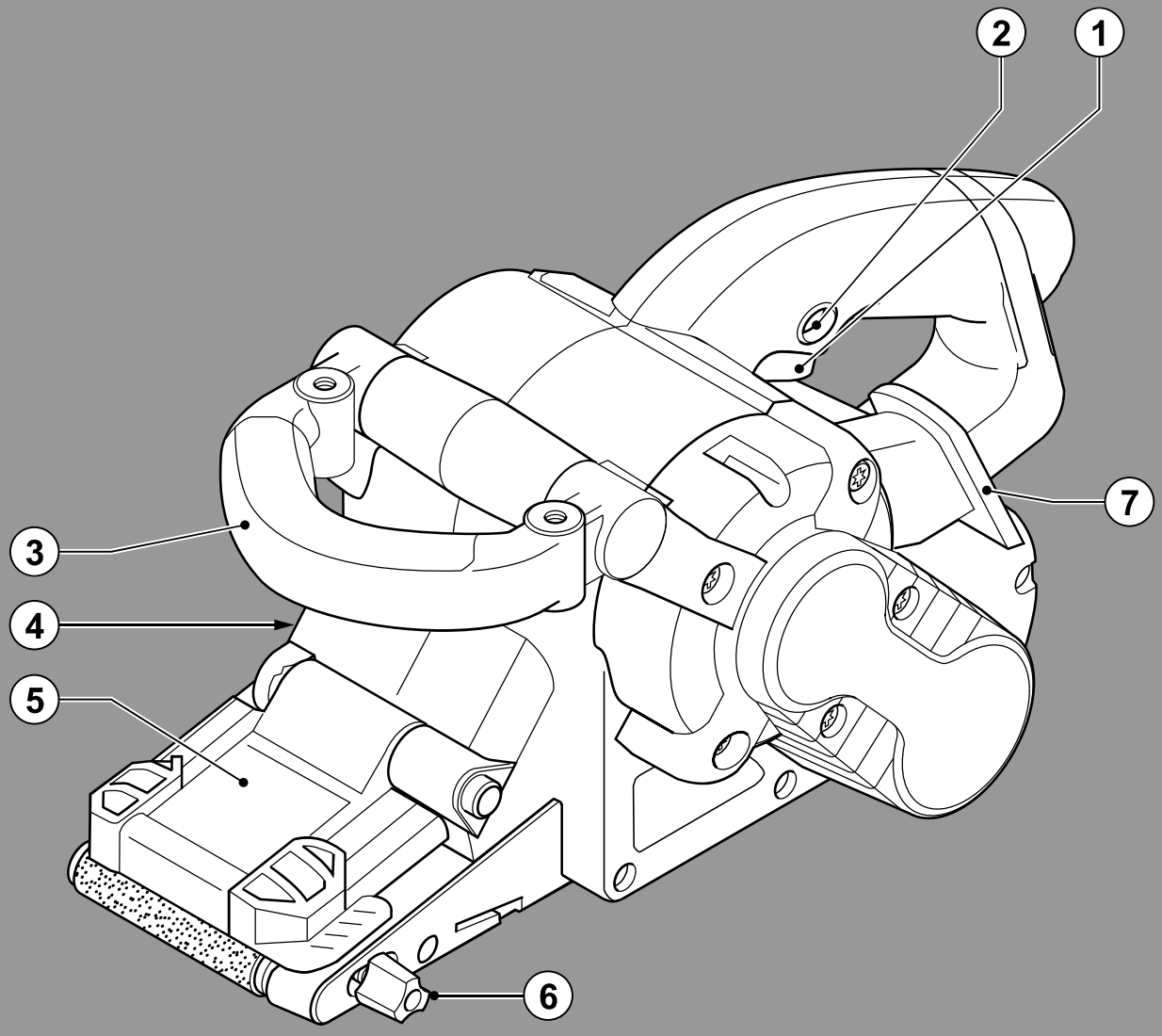

www.blackanddecker.co.uk

KA88

English (Original instructions) 5

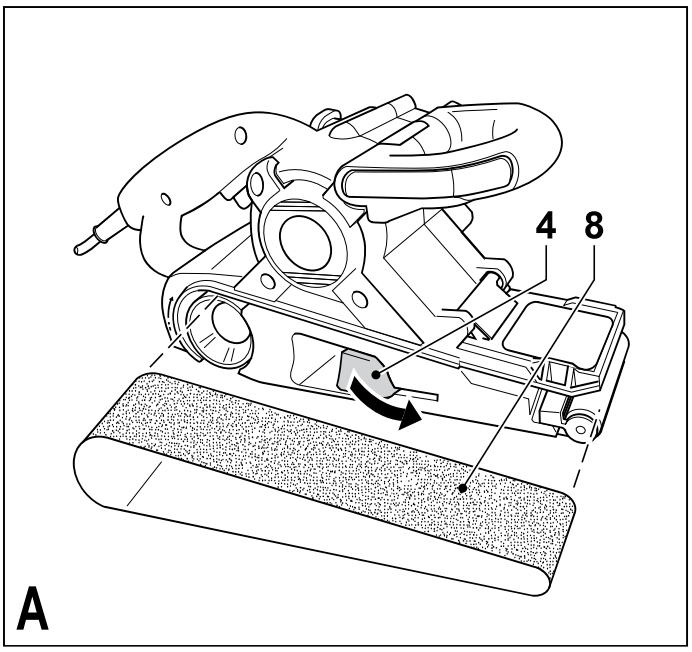
4
8
A

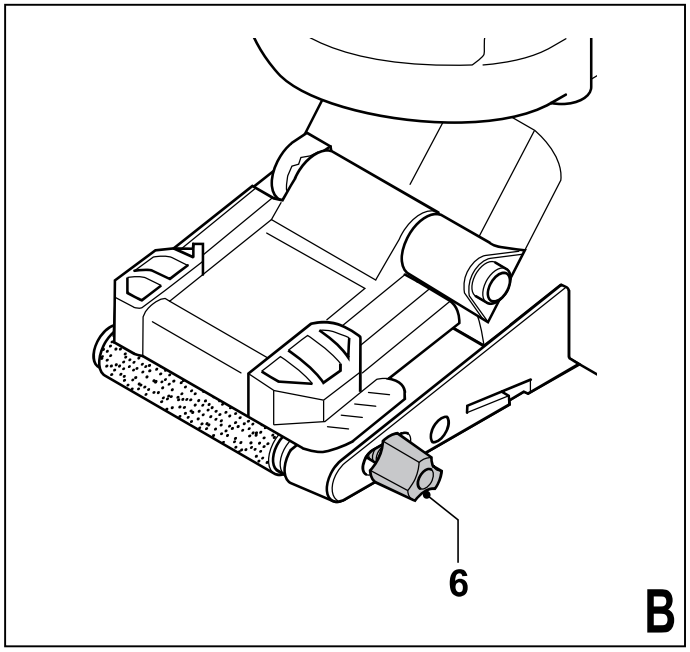
6
B

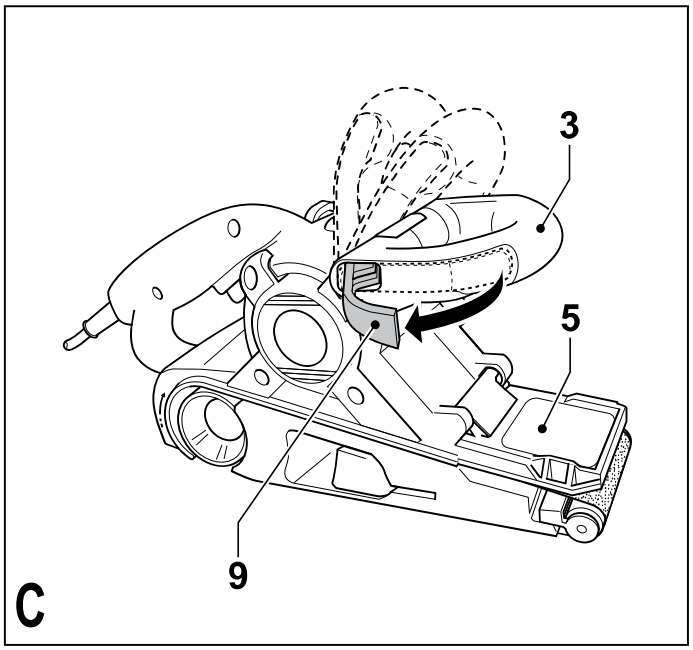
3
5
9
C

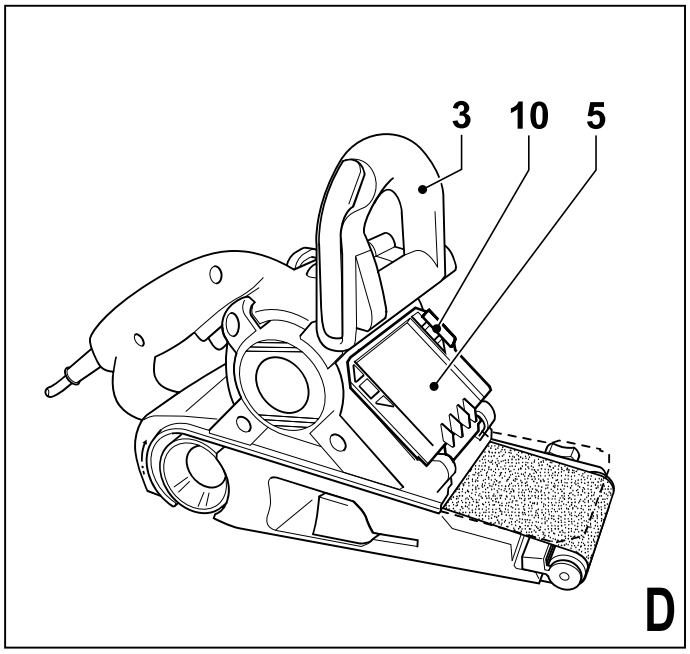
3
10
5
D

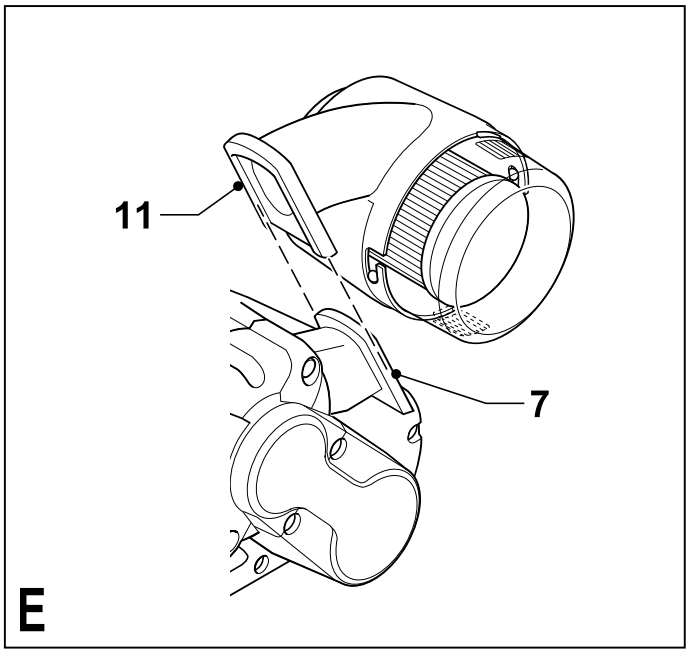
11
7
E

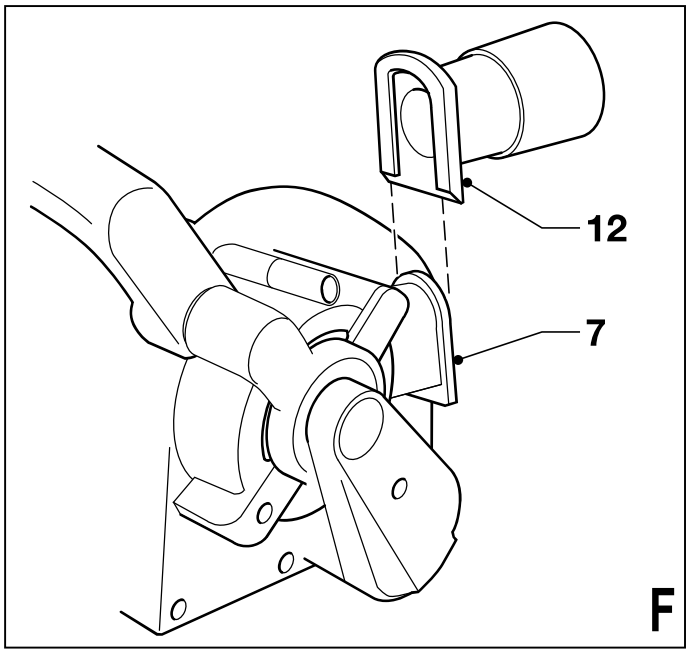
12
7
F

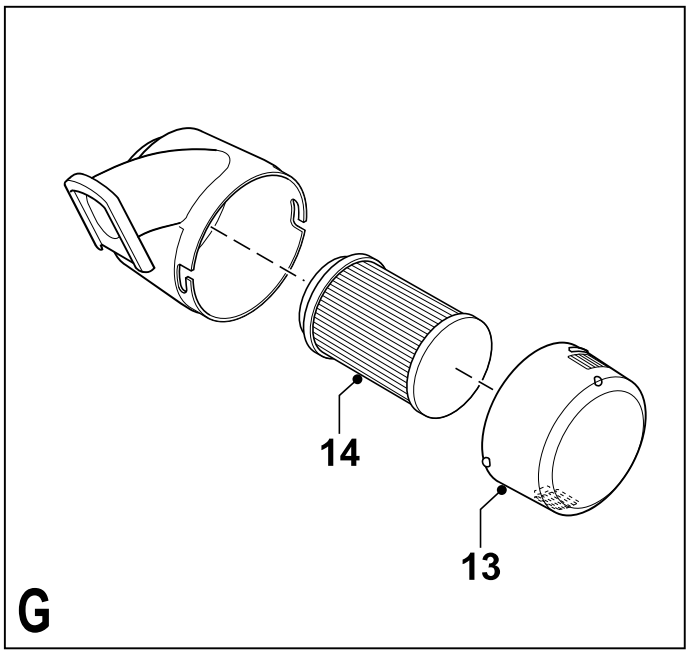
14
13
G

Intended use

Your Black & Decker sander has been designed for sanding wood, metal, plastics and painted surfaces. This tool is intended for consumer use only.

Safety instructions

General power tool safety warnings



Warning! Read all safety warnings and all instructions. Failure to follow the warnings and instructions listed below may result in electric shock, fire and/or serious injury.

Save all warnings and instructions for future reference.
The term "power tool" in all of the warnings listed below refers to your mains operated (corded) power tool or battery operated (cordless) power tool.

1. **Work area safety**

a. **Keep work area clean and well lit.** Cluttered or dark areas invite accidents.

b. **Do not operate power tools in explosive atmospheres, such as in the presence of flammable liquids, gases or dust.** Power tools create sparks which may ignite the dust or fumes.

c. **Keep children and bystanders away while operating a power tool.** Distractions can cause you to lose control.

2. **Electrical safety**

a. **Power tool plugs must match the outlet. Never modify the plug in any way. Do not use any adapter plugs with earthed (grounded) power tools.** Unmodified plugs and matching outlets will reduce risk of electric shock.

b. **Avoid body contact with earthed or grounded surfaces such as pipes, radiators, ranges and refrigerators.** There is an increased risk of electric shock if your body is earthed or grounded.

c. **Do not expose power tools to rain or wet conditions.** Water entering a power tool will increase the risk of electric shock.

d. **Do not abuse the cord. Never use the cord for carrying, pulling or unplugging the power tool. Keep cord away from heat, oil, sharp edges or moving parts.** Damaged or entangled cords increase the risk of electric shock.

e. **When operating a power tool outdoors, use an extension cord suitable for outdoor use.** Use of a cord suitable for outdoor use reduces the risk of electric shock.

f. **If operating a power tool in a damp location is unavoidable, use a residual current device (RCD) protected supply.** Use of an RCD reduces the risk of electric shock.

3. **Personal safety**

a. **Stay alert, watch what you are doing and use common sense when operating a power tool. Do not use a power tool while you are tired or under the influence of drugs, alcohol or medication.** A moment of inattention while operating power tools may result in serious personal injury.

b. **Use personal protective equipment. Always wear eye protection.** Protective equipment such as dust mask, non-skid safety shoes, hard hat, or hearing protection used for appropriate conditions will reduce personal injuries.

c. **Prevent unintentional starting. Ensure the switch is in the off-position before connecting to power source and/or battery pack, picking up or carrying the tool.** Carrying power tools with your finger on the switch or energising power tools that have the switch on invites accidents.

d. **Remove any adjusting key or wrench before turning the power tool on.** A wrench or a key left attached to a rotating part of the power tool may result in personal injury.

e. **Do not overreach. Keep proper footing and balance at all times.** This enables better control of the power tool in unexpected situations.

f. **Dress properly. Do not wear loose clothing or jewellery. Keep your hair, clothing and gloves away from moving parts.** Loose clothes, jewellery or long hair can be caught in moving parts.

g. **If devices are provided for the connection of dust extraction and collection facilities, ensure these are connected and properly used.** Use of dust collection can reduce dust-related hazards.

4. **Power tool use and care**

a. **Do not force the power tool. Use the correct power tool for your application.** The correct power tool will do the job better and safer at the rate for which it was designed.

b. **Do not use the power tool if the switch does not turn it on and off.** Any power tool that cannot be controlled with the switch is dangerous and must be repaired.

c. **Disconnect the plug from the power source and/or the battery pack from the power tool before making any adjustments, changing accessories, or storing power tools.** Such preventive safety measures reduce the risk of starting the power tool accidentally.

d. **Store idle power tools out of the reach of children and do not allow persons unfamiliar with the power tool or these instructions to operate the power tool.**
Power tools are dangerous in the hands of untrained users.

e. **Maintain power tools. Check for misalignment or binding of moving parts, breakage of parts and any other condition that may affect the power tools operation. If damaged, have the power tool repaired before use.**
Many accidents are caused by poorly maintained power tools.

f. **Keep cutting tools sharp and clean.** Properly maintained

cutting tools with sharp cutting edges are less likely to bind and are easier to control.

g. **Use the power tool, accessories and tool bits etc., in accordance with these instructions, taking into account the working conditions and the work to be performed.** Use of the power tool for operations different from those intended could result in a hazardous situation.

5. **Service**

a. **Have your power tool serviced by a qualified repair person using only identical replacement parts.** This will ensure that the safety of the power tool is maintained.

Additional power tool safety warnings



Warning! Additional safety warnings for sanders

- **Hold the power tool by insulated gripping surfaces, because the sanding belt / sanding base may contact its own cord.** Cutting a "live" wire may make exposed metal parts of the power tool "live" and could give the operator an electric shock.
- **Use clamps or another practical way to secure and support the workpiece to a stable platform.** Holding the work by hand or against your body leaves it unstable and may lead to loss of control.
- **Warning!** Contact with or inhalation of dusts arising from sanding applications may endanger the health of the operator and possible bystanders. Wear a dust mask specifically designed for protection against dust and fumes and ensure that persons within or entering the work area are also protected.
- Thoroughly remove all dust after sanding.
- Take special care when sanding paint which is possibly lead based or when sanding some woods and metal which may produce toxic dust:
  - Do not let children or pregnant women enter the work area.
  - Do not eat, drink or smoke in the work area.
  - Dispose of dust particles and any other debris safely.
- This tool is not intended for use by persons (including children) with reduced physical, sensory or mental capabilities, or lack of experience and knowledge, unless they have been given supervision or instruction concerning use of the appliance by a person responsible for their safety. Children should be supervised to ensure that they do not play with the appliance.
- The intended use is described in this instruction manual. The use of any accessory or attachment or performance of any operation with this tool other than those recommended in this instruction manual may present a risk of personal injury and/or damage to property.

Safety of others

- This appliance is not intended for use by persons (including children) with reduced physical, sensory or mental capabilities, or lack of experience and knowledge, unless they have been given supervision or instruction concerning use of the appliance by a person responsible for their safety.
- Children should be supervised to ensure that they do not play with the appliance.

Residual risks.

Additional residual risks may arise when using the tool which may not be included in the enclosed safety warnings. These risks can arise from misuse, prolonged use etc.
Even with the application of the relevant safety regulations and the implementation of safety devices, certain residual risks can not be avoided. These include:

- **Injuries caused by touching any rotating/moving parts.**
- **Injuries caused when changing any parts, blades or accessories.**
- **Injuries caused by prolonged use of a tool. When using any tool for prolonged periods ensure you take regular breaks.**
- **Impairment of hearing.**
- **Health hazards caused by breathing dust developed when using your tool (example:- working with wood, especially oak, beech and MDF.)**

Vibration

The declared vibration emission values stated in the technical data and the declaration of conformity have been measured in accordance with a standard test method provided by EN 60745 and may be used for comparing one tool with another. The declared vibration emission value may also be used in a preliminary assessment of exposure.

Warning! The vibration emission value during actual use of the power tool can differ from the declared value depending on the ways in which the tool is used. The vibration level may increase above the level stated.

When assessing vibration exposure to determine safety measures required by 2002/44/EC to protect persons regularly using power tools in employment, an estimation of vibration exposure should consider, the actual conditions of use and the way the tool is used, including taking account of all parts of the operating cycle such as the times when the tool is switched off and when it is running idle in addition to the trigger time.

Labels on tool
The following pictograms are shown on the tool:



Warning! To reduce the risk of injury, the user must read the instruction manual.

Electrical safety



This tool is double insulated; therefore no earth wire is required. Always check that the power supply corresponds to the voltage on the rating plate.

- If the supply cord is damaged, it must be replaced by the manufacturer or an authorised Black & Decker Service Centre in order to avoid a hazard.

Features
1. On/off switch
2. Lock-on button
3. Adjustable handle
4. Tension lever
5. Retractable hood
6. Centring knob
7. Dust extraction outlet

Assembly
Warning! Before assembly, make sure that the tool is switched off and unplugged.

Fitting a sanding belt (fig. A)
Warning! Never use the tool without a sanding belt.
- Pull the tension lever (4) outward to release the tension on the sanding belt (8).
- Remove the old sanding belt.
- Place a new sanding belt over the rollers. Ensure that the arrow on the sanding belt points in the same direction as the arrow on the tool.
- Push the tension lever (4) inward to tension the sanding belt.

Adjusting the sanding belt tracking (fig. B)
To ensure a correct tracking, the sanding belt must be centred over the rollers.
- Switch on the tool while holding it upside down.
- Turn the centring knob (6) as required until the tracking of the belt is centred over the rollers.

Adjusting the handle (fig. C)
The handle is adjustable to 3 positions.
- Unlock the handle (3) by pulling the locking handle (9) outward.
- Adjust the handle in the desired position.
- Lock the handle by pushing the locking handle inward.

Retracting the hood (fig. D)
The hood can be retracted for sanding in confined spaces.

Warning! The hood can only be retracted when the adjustable handle is in the up position.
- Adjust the handle (3) in the straight-up position.
- Lift the hood (5) up.
- To close the hood, pull the tab (10) sideways first.

Fitting and removing the dust cassette (fig. E)
- Slide the dust cassette (11) over the dust extraction outlet (7).
- To remove the dust cassette, slide it off the outlet.

Connecting a vacuum cleaner (fig. F)
- Slide the adaptor (12) over the dust extraction outlet (7).
- Connect the hose of the vacuum cleaner to the adaptor.

Use
Warning! Let the tool work at its own pace. Do not overload.

Switching on and off
- To switch the tool on, press the on/off switch (1).
- For continuous operation, press the lock-on button (2) and release the on/off switch.
- To switch the tool off, release the on/off switch. To switch the tool off when in continuous operation, press the on/off switch once more and release it.

Emptying the dust cassette (fig. E & G)
The dust cassette should be emptied every 10 minutes of use.
- Remove the dust cassette (11) to the rear and off the tool.
- Remove the cover (13) by twisting it clockwise.
- Hold dust cassette with the filter (14) facing down and shake the cassette to empty the contents. Shake the cover to empty the contents.
- Refit the cover (13) onto the dust cassette, twisting it counterclockwise until it locks into place.
- Refit the dust cassette onto the tool.

Cleaning the dust cassette filter
The dust cassette filter is re-usable and should be cleaned regularly.
- Empty the dust cassette (11) as described above.
- Pull the filter (14) off the dust cassette.

Warning! Do not twist the filter.
- Shake off excess dust by tapping the filter into a dustbin.

Warning! Do not brush or use compressed air or sharp objects to clean the filter. Do not wash the filter.
- Replace the filter.
- Refit the cover.
- Refit the dust cassette onto the tool.

Hints for optimum use

- Always hold the tool with both hands.
- Do not exert too much pressure on the tool.
- Regularly check the condition of the sanding belt. Replace when necessary.
- Always sand with the grain of the wood.
- When sanding new layers of paint before applying another layer, use extra fine grit.
- On very uneven surfaces, or when removing layers of paint, start with a coarse grit. On other surfaces, start with a medium grit. In both cases, gradually change to a fine grit for a smooth finish.
- Consult your retailer for more information on available accessories.

Accessories

The performance of your tool depends on the accessory used. Black & Decker and Piranha accessories are engineered to high quality standards and designed to enhance the performance of your tool. By using these accessories you will get the very best from your tool.

Maintenance

Your tool has been designed to operate over a long period of time with a minimum of maintenance. Continuous satisfactory operation depends upon proper tool care and regular cleaning.

Warning! Before performing any maintenance, switch off and unplug the tool.

- Regularly clean the ventilation slots in your tool using a soft brush or dry cloth.
- Regularly clean the motor housing using a damp cloth. Do not use any abrasive or solvent-based cleaner.

Mains plug replacement (U.K. & Ireland only)

If a new mains plug needs to be fitted:

- Safely dispose of the old plug.
- Connect the brown lead to the live terminal in the new plug.
- Connect the blue lead to the neutral terminal.

Warning! No connection is to be made to the earth terminal. Follow the fitting instructions supplied with good quality plugs. Recommended fuse: 5 A.

Protecting the environment



Separate collection. This product must not be disposed of with normal household waste.

Should you find one day that your Black & Decker product needs replacement, or if it is of no further use to you, do not dispose of it with household waste. Make this product available for separate collection.



Separate collection of used products and packaging allows materials to be recycled and used again. Re-use of recycled materials helps prevent environmental pollution and reduces the demand for raw materials.

Local regulations may provide for separate collection of electrical products from the household, at municipal waste sites or by the retailer when you purchase a new product.

Black & Decker provides a facility for the collection and recycling of Black & Decker products once they have reached the end of their working life. To take advantage of this service please return your product to any authorised repair agent who will collect them on our behalf.

You can check the location of your nearest authorised repair agent by contacting your local Black & Decker office at the address indicated in this manual. Alternatively, a list of authorised Black & Decker repair agents and full details of our after-sales service and contacts are available on the Internet at: **www.2helpU.com**

Technical data

		KA88 Type 3
Input voltage	V_{AC}	230
Power input	W	720
Belt speed	m/min	250
Sanding base	mm	75 x 533
Weight	kg	3.7

Level of sound pressure according to EN 60745:
Sound pressure (L_{pA}) 91 dB(A), uncertainty (K) 3 dB(A)
Sound power (L_{WA}) 102 dB(A), uncertainty (K) 3 dB(A)

Vibration total values (triax vector sum) according to EN 60745:
Vibration emission value (a_h) 5.3 m/s^2, uncertainty (K) 1.5 m/s^2

EC declaration of conformity

MACHINERY DIRECTIVE

CE

KA88

Black & Decker declares that these products described under "technical data" are in compliance with:

2006/42/EC, EN 60745-1, EN 60745-2-4

For more information, please contact Black & Decker at the following address or refer to the back of the manual.

The undersigned is responsible for compilation of the technical file and makes this declaration on behalf of Black & Decker.



Kevin Hewitt
Vice-President Global Engineering
Black & Decker Europe, 210 Bath Road, Slough,
Berkshire, SL1 3YD
United Kingdom
27/10/2010

Guarantee

Black & Decker is confident of the quality of its products and offers an outstanding guarantee. This guarantee statement is in addition to and in no way prejudices your statutory rights. The guarantee is valid within the territories of the Member States of the European Union and the European Free Trade Area.

If a Black & Decker product becomes defective due to faulty materials, workmanship or lack of conformity, within 24 months from the date of purchase, Black & Decker guarantees to replace defective parts, repair products subjected to fair wear and tear or replace such products to ensure minimum inconvenience to the customer unless:

- The product has been used for trade, professional or hire purposes;
- The product has been subjected to misuse or neglect;
- The product has sustained damage through foreign objects, substances or accidents;
- Repairs have been attempted by persons other than authorised repair agents or Black & Decker service staff.

To claim on the guarantee, you will need to submit proof of purchase to the seller or an authorised repair agent. You can check the location of your nearest authorised repair agent by contacting your local Black & Decker office at the address indicated in this manual. Alternatively, a list of authorised Black & Decker repair agents and full details of our after-sales service and contacts are available on the Internet at: **www.2helpU.com**

Please visit our website **www.blackanddecker.co.uk** to register your new Black & Decker product and to be kept up to date on new products and special offers. Further information on the Black & Decker brand and our range of products is available at **www.blackanddecker.co.uk**

BLACK & DECKER

KA88

TYP. 3

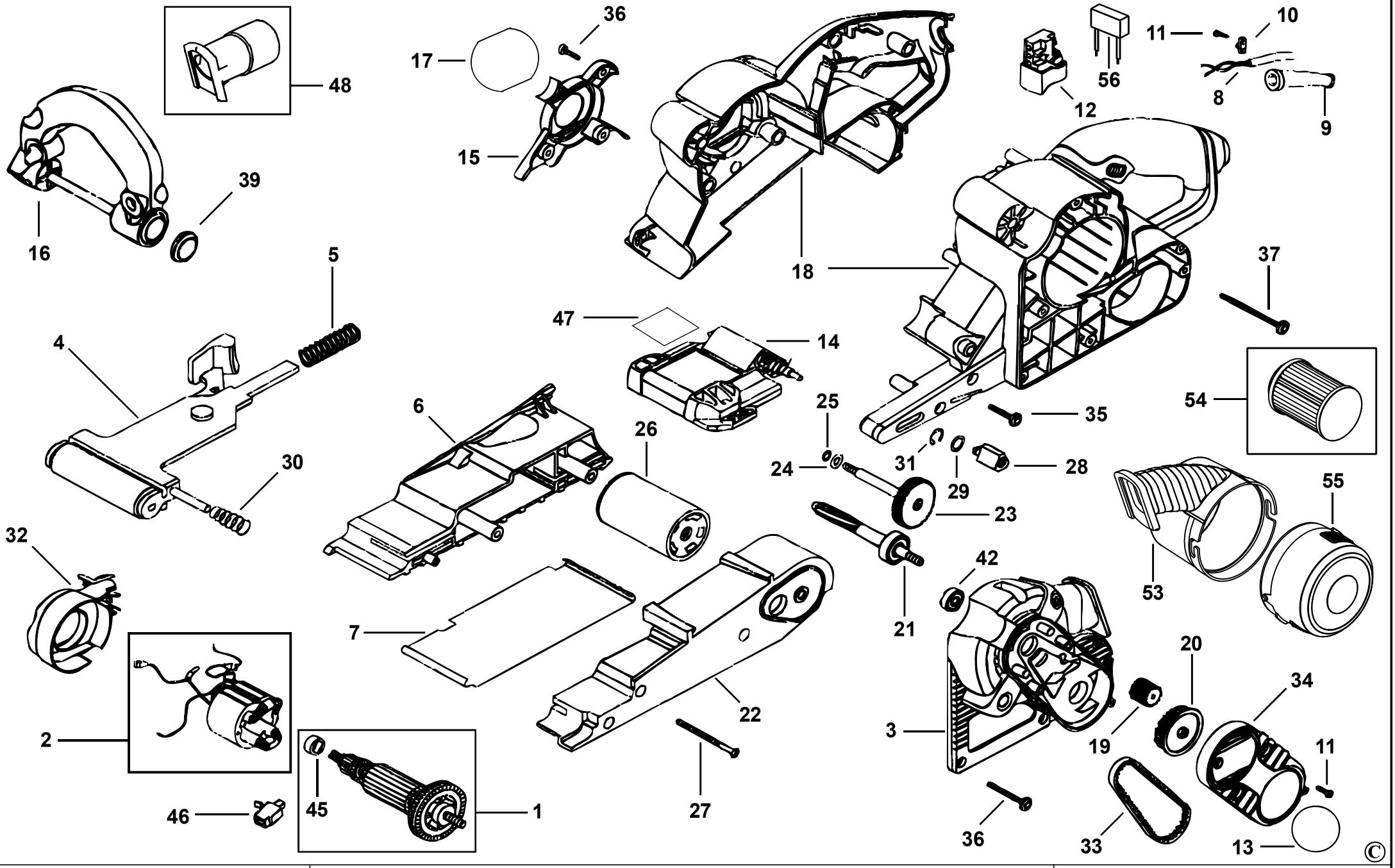

Australia

Black & Decker (Australia) Pty. Ltd.
20 Fletcher Road, Mooroolbark,
Victoria, 3138

Tel. 03-8720 5100
Fax 03-9727 5940

New Zealand

Black & Decker
5 Te Apunga Place
Mt Wellington
Auckland 1060

Tel. +64 9 259 1133
Fax +64 9 259 1122

United Kingdom

Black & Decker
210 Bath Road
Slough, Berkshire SL1 3YD

Tel. 01753 511234
Fax 01753 551155