BLACK+DECKER®

English ***(original instructions)*** 3

BSV520
BSV525
BSV520BL
BSV525BL
BSV525BLPA



www.blackanddecker.eu

Fig. A

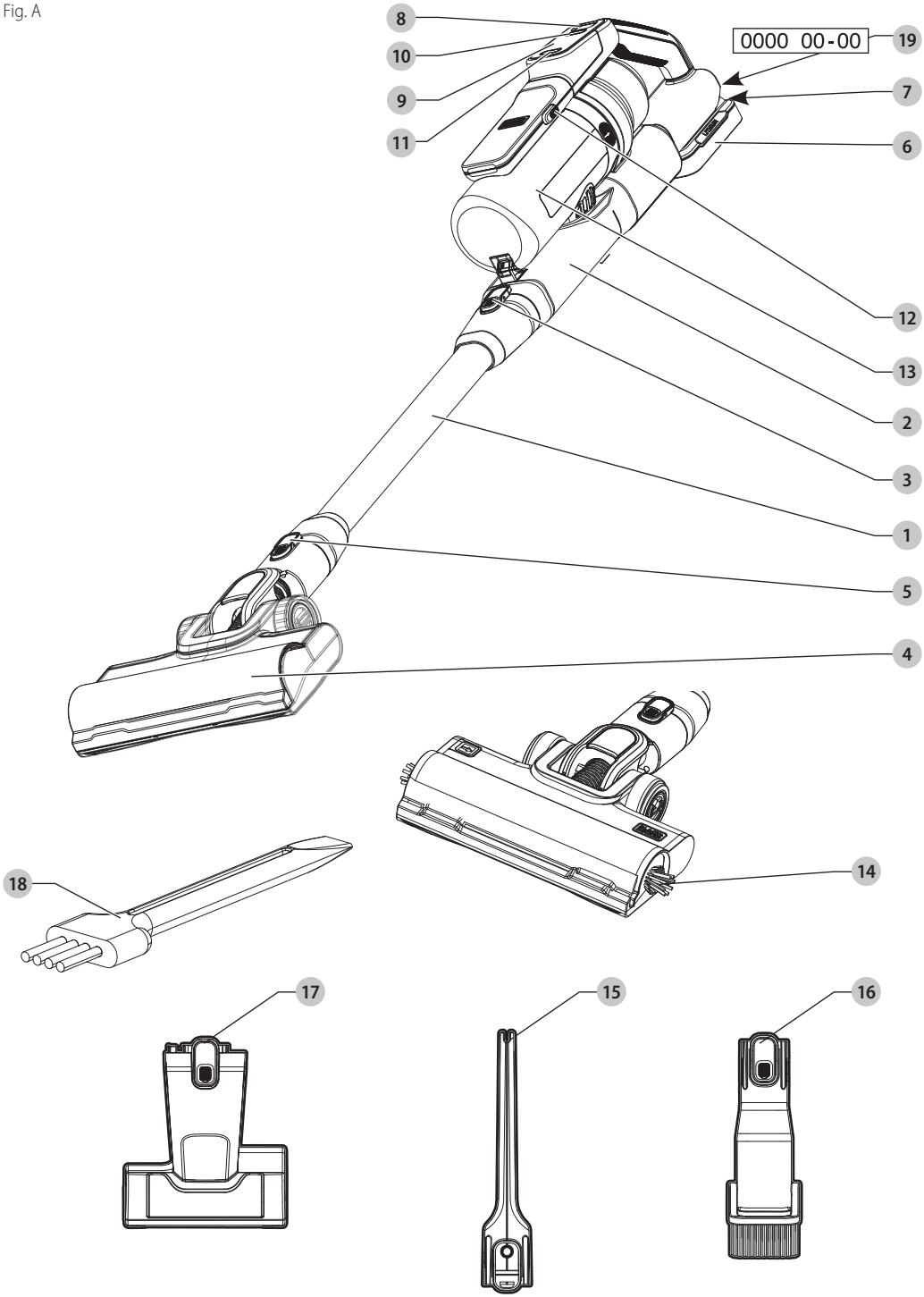

Copyright BLACK+DECKER

Fig. B

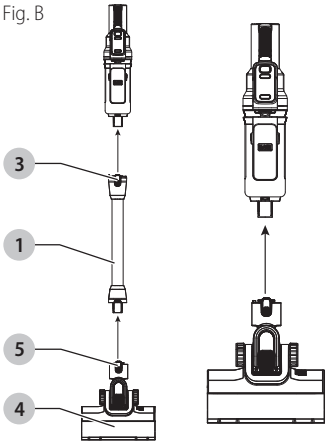

Fig. C

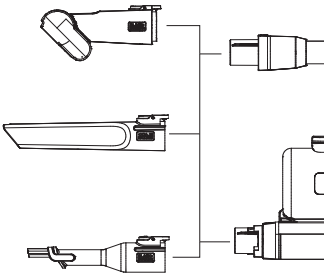

Fig. D

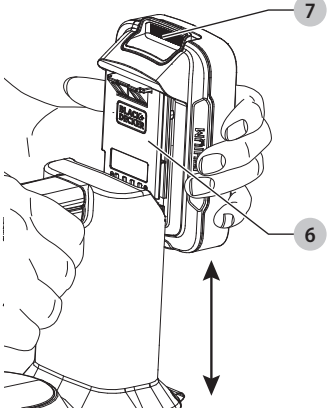

Fig. E

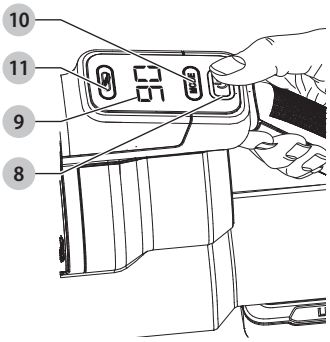

Fig. F

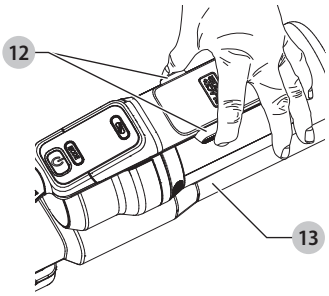

Fig. G

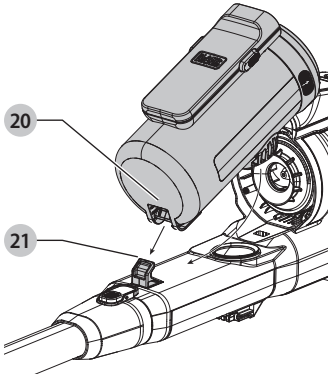

Fig. H

BSV525BLPA

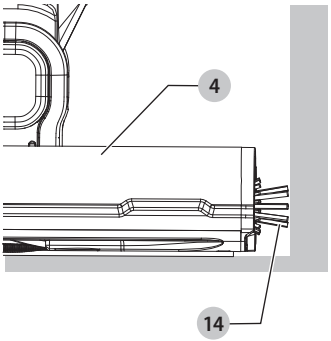

Fig. I

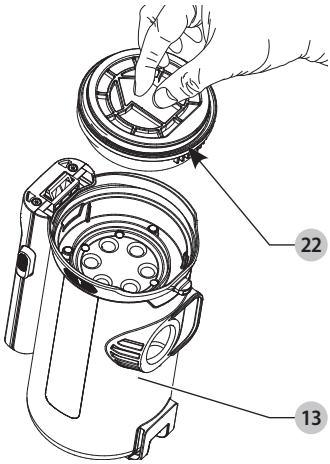

Fig. J

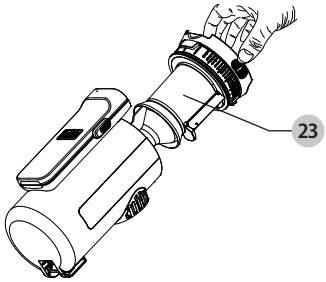

Fig. K

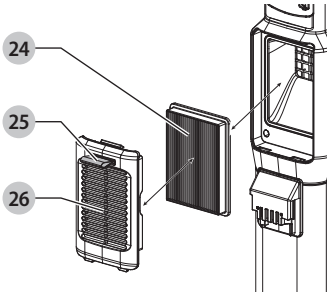

BSV520BL, BSV525BL, BSV525BLPA

Fig. L

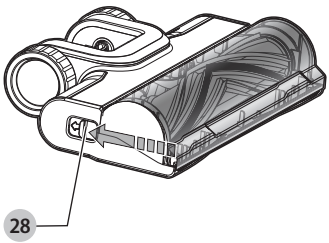

Fig. M

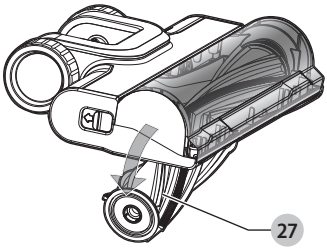

Fig. N

BSV525BLPA

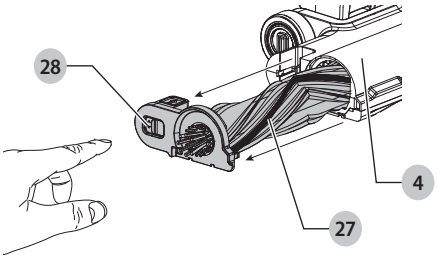

Fig. O

BSV525BLPA

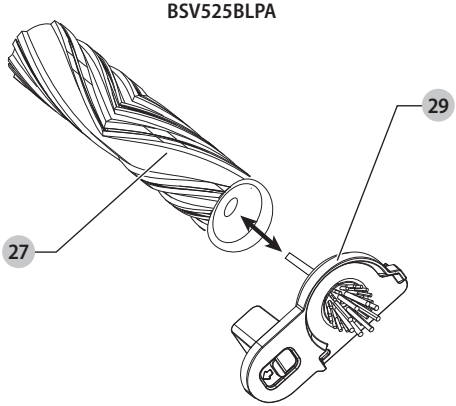

Fig. P

BSV525BLPA

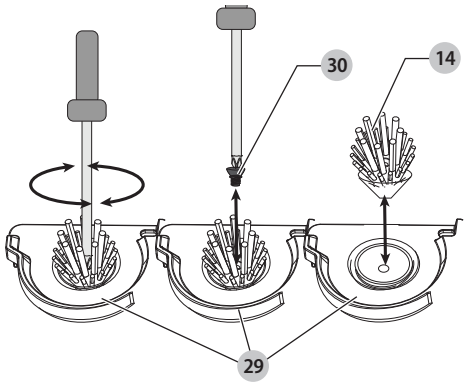

CORDLESS VACUUM CLEANER
BSV520, BSV525, BSV520BL, BSV525BL, BSV525BLPA

Intended Use

Your BLACK+DECKER vacuum has been designed for vacuuming everyday dry messes. This appliance is intended for household use only and for vacuuming materials that are not harmful to health. This product is NOT to be used for filtering of pathogens (for example COVID-19).

DO NOT use to vacuum liquids.

DO NOT use the vacuum cleaner for combustible dust.

DO NOT use the vacuum cleaner in explosive atmospheres.

NOTE: This appliance is suited for residential use.

DO NOT use under wet conditions or in the presence of flammable liquids or gases.

DO NOT let children come into contact with the tool. Supervision is required when inexperienced operators use this tool.

- **Young children and the infirm.** This appliance is not intended for use by young children or infirm persons without supervision.
- This machine is not intended for use by persons (including children) with reduced physical, sensory or mental capabilities, or lack of experience and knowledge. Children should never be left alone with this product.
- Children should be supervised to ensure that they do not play with the appliance.

Technical Data

		BSV520	BSV520BL
Type		1	1
Power source		DC	DC
Battery voltage	V_{DC}	18	18
Charging time	H	5	5
Battery capacity	a_h	2.0	2.0
Tank Volume	L	0.65	0.65
Weight (without battery pack)	kg	3.1	2.99

		BSV525	BSV525BL	BSV525BLPA
Type		1	1	1
Power source		DC	DC	DC
Battery voltage	V_{DC}	18	18	18
Charging time	H	6	6	6
Battery capacity	a_h	2.5	2.5	2.5
Tank Volume	L	0.65	0.65	0.65
Weight (without battery pack)	kg	3.1	2.99	2.99

Battery		BDL1518 BDL1518E	BDL2018 BDL2018E	BDL2518 BDL2518E
Voltage	V_{dc}	18	18	18
Capacity	Ah	1.5	2.0	2.5
Type		Li-Ion	Li-Ion	Li-Ion
Weight	kg	0.36	0.36	0.36

SAVE ALL WARNINGS AND INSTRUCTIONS FOR FUTURE REFERENCE

⚠📖 ***WARNING:*** *To reduce the risk of injury, read the instruction manual.*

Definitions: Safety Guidelines

The definitions below describe the level of severity for each signal word. Please read the manual and pay attention to these symbols.

⚠ ***DANGER:*** *Indicates an imminently hazardous situation which, if not avoided,* ***will*** *result in* ***death or serious injury****.*

⚠ ***WARNING:*** *Indicates a potentially hazardous situation which, if not avoided,* ***could*** *result in* ***death or serious injury****.*

⚠ ***CAUTION:*** *Indicates a potentially hazardous situation which, if not avoided,* ***may*** *result in* ***minor or moderate injury****.*

NOTICE: *Indicates a practice* ***not related to personal injury*** *which, if not avoided,* ***may*** *result in* ***property damage****.*

⚠ *Denotes risk of electric shock.*

⚠ *Denotes risk of fire.*

IMPORTANT SAFETY INSTRUCTIONS

When using an electrical appliance, basic precautions should always be followed, including the following:

READ ALL INSTRUCTIONS BEFORE USING THIS APPLIANCE.

⚠ ***WARNING:*** *Some household dust contains chemicals known to the State of California to cause cancer, birth defects or other reproductive harm such as asbestos and lead in lead based paint.*

⚠ ***WARNING:*** *Do not attempt to modify or repair the appliance.*

⚠ ***WARNING:*** *Do not charge the battery at ambient temperatures below 39 °F (4 °C) or above 104 °F (40 °C). Follow all charging instructions and do not charge the appliance outside of the temperature range specified in the instructions. Charging improperly or at temperatures outside of the specified range may damage the battery and increase risk of fire.*

⚠ ***WARNING:*** *To reduce the risk of fire, electrical shock or injury:*

- *Shock Hazard. To protect against risk of electrical shock, do not put charging base in water or other liquid.*
- *Use only as described in this manual. Use only manufacturer's recommended attachments.*

• *Do not use with damaged cord or plug. If appliance is not working as it should, has been dropped, damaged, left outdoors, or dropped into water, return it to a service center.*

• *Do not pull or carry by cord, use cord as a handle, close a door on cord, or pull cord around sharp edges or corners. Do not run appliance over cord. Keep cord away from heated surfaces.*

• *Do not unplug by pulling on cord. To unplug, grasp the plug, not the cord.*

• *Do not handle charger, including charger plug, and charger terminals with wet hands.*

• *Do not put any object into openings. Do not use with any opening blocked; keep free of dust, lint, hair, and anything that may reduce air flow.*

• *Do not pick up anything that is burning or smoking, such as cigarettes, matches, or hot ashes.*

• *Do not use without dust bag and/or filters in place.*

• ***Prevent unintentional starting. Ensure the switch is in the off-position before picking up or carrying the appliance.*** *Carrying the appliance with your finger on the switch or energizing an appliance that has the switch on, invites accidents.*

• ***Recharge only with the charger specified by the manufacturer.*** *A charger that is suitable for one type of battery pack may create a risk of fire when used with another battery pack.*

• *Use appliance only with specifically designed battery packs. Use of any other battery packs may create a risk of injury and fire.*

• ***When battery pack is not in use, keep it away from other metal objects, like paper clips, coins, keys, nails, screws or other small metal objects, that can make a connection from one terminal to another.*** *Shorting the battery terminals together may cause burns or a fire.*

• ***Under abusive conditions, liquid may be ejected from the battery;*** *avoid contact. If contact accidentally occurs, flush with water. If liquid contacts eyes, additionally seek medical help. Liquid ejected from the battery may cause irritation or burns.*

• ***Do not use a battery pack or appliance that is damaged or modified.*** *Damaged or modified batteries may exhibit unpredictable behavior resulting in fire, explosion or risk of injury.*

• ***Do not expose a battery pack or appliance to fire or excessive temperature.*** *Exposure to fire or temperature above 266 °F (130 °C) may cause explosion.*

• ***Follow all charging instructions and do not charge the battery pack or appliance outside of the temperature range specified in the instructions.*** *Charging improperly or at temperatures outside of the specified range may damage the battery and increase the risk of fire.*

• ***Have servicing performed by a qualified repair person using only identical replacement parts.*** *This will ensure that the safety of the product is maintained.*

• ***Do not modify or attempt to repair the appliance or the battery pack except as indicated in the instructions for use and care***

• ***Do not allow to be used as a toy.*** *Close attention is necessary when used by or near children.*

• ***Keep hair, loose clothing, fingers, and all parts of body away from openings and moving parts.***

• ***Use extra care when cleaning on stairs.***

• ***Do not use to pick up flammable or combustible liquids, such as gasoline, or use in areas where they may be present.***

• *Static shocks are possible in dry areas or when relative humidity of the air is low. This is only temporary and does not affect performance of the product. To reduce frequency of static shocks, avoid using when humidity is low.*

• ***Do not look into the air vents when the unit is switched on, as sometimes there is a possibility of small debris being discharged from the air vents, especially after cleaning/ replacement of the filters as debris inside the unit can be disturbed.***

• *Do not charge the unit outdoors.*

• *Use only the charger supplied by the manufacturer to recharge.*

• *Do not incinerate the appliance even if it is severely damaged. The batteries can explode in a fire.*

• *This appliance is intended for household use only and not for commercial or industrial use.*

• *Do not allow the cord to hang over the edge of a table or counter or touch hot surfaces.*

• *The unit should be placed or mounted away from sinks and hot surfaces.*

• *Plug the charger directly into an electrical outlet.*

• *Use the charger only in a standard electrical outlet (120V/60Hz).*

• *Unplug the charger from outlet before any routine cleaning or maintenance.*

• *This product includes rechargeable li-ion batteries. Do not incinerate batteries as they will explode at high temperatures.*

• *Leaks from battery cells can occur under extreme conditions. If the liquid, which is a 20-35% solution of potassium hydroxide, gets on the skin (1) wash quickly with soap and water or (2) neutralize with a mild acid such as lemon juice or vinegar. If the liquid gets into the eyes, flush them immediately with clean water for a minimum of 10 minutes. Seek medical attention.*

SAVE THESE INSTRUCTIONS

Important Safety Instructions

The intended use is described in this manual. The use of any accessory or attachment or the performance of any operation with this appliance other than those recommended in this instruction manual may present a risk of personal injury.

• *Do not use the appliance to pick up liquids or any materials that could catch fire.*

• *Keep hair, loose clothing, fingers, and all body parts away from the openings and moving parts.*

• *Turn off all controls before unplugging appliance or removing the battery pack.*

• *Use extra care when cleaning on stairs.*

• *Static shocks are possible in dry areas or when the relative humidity of the air is low. This is only temporary and does not affect the use of the vacuum.*

• *Do not use the appliance near water.*

• *Do not immerse the appliance in water.*

• *Do not use vacuum without filters in place.*

• *This appliance can be used by children aged from 8 years and above and persons with reduced physical, sensory or mental capabilities or lack of experience and knowledge if they have been given supervision or instruction concerning use of the appliance in a safe way and understand the hazards involved.*

• *Children shall not play with the appliance.*

- *Cleaning and user maintenance shall not be made by children without supervision.*
- *When not in use, the appliance should be stored in a dry place.*
- *Children should not have access to stored appliances.*

Additional Safety Warnings

a) ***Disconnect the battery pack from the appliance before making any adjustments, changing accessories, or storing appliance.*** *Such preventive safety measures reduce the risk of starting the appliance accidentally.*

b) ***Use appliance only with BLACK+DECKER recommended battery packs.*** *Use of any other battery packs may create a risk of injury and fire.*

c) ***When battery pack is not in use, keep it away from other metal objects, like paper clips, coins, keys, nails, screws or other small metal objects, that can make a connection from one terminal to another.*** *Shorting the battery terminals together may cause burns or a fire.*

d) ***Under abusive conditions, liquid may be ejected from the battery; avoid contact. If contact accidentally occurs, flush with water. If liquid contacts eyes, additionally seek medical help.*** *Liquid ejected from the battery may cause irritation or burns.*

e) ***Do not use a battery pack or appliance that is damaged or modified.*** *Damaged or modified batteries may exhibit unpredictable behavior resulting in fire, explosion or risk of injury.*

f) ***Do not expose a battery pack or appliance to fire or excessive temperature.*** *Exposure to fire or temperature above 266 °F (130 °C) may cause explosion.*

g) ***Do not use the vacuum cleaner if dust is blown out of the ventilation slots. Switch off the vacuum cleaner and check whether the filter is installed correctly or is defective.*** *Defective filters must be replaced immediately.*

h) ***Have servicing performed by a qualified repair person using only identical replacement parts.*** *This will ensure that the safety of the product is maintained****.***

Inspection and Repairs

Before use, check the appliance for damaged or defective parts. Check for breakage of parts, damage to switches and any other conditions that may affect its operation.

- *Do not use the appliance if any part is damaged or defective.*
- *Have any damaged or defective parts repaired or replaced by an authorized repair agent.*
- *Never attempt to remove or replace any parts other than those specified in this manual.*

Residual Risks

Even with the application of the relevant safety regulations and the implementation of safety devices, certain residual risks can not be avoided. These include:

- *Injuries caused by touching any rotating/moving parts.*
- *Injuries caused when changing any parts, blades or accessories.*
- *Injuries caused by prolonged use of a tool. When using any tool for prolonged periods ensure you take regular breaks.*
- *Impairment of hearing.*

Markings on Appliance

The following symbols appear on this appliance along with the date code.



Read instruction manual before use.



Keep hair away from brushes, openings and other moving parts.

Battery Type

These battery packs may be used:

Battery	(kg)
BDL1518/BDL1518E	0.36
BDL2018/BDL2018E	0.36
BDL2518/BDL2518E	0.56

Refer to the battery/charger manual for more information.

Date Code Position (Fig. A)

The production date code **19** consists of a 4-digit year followed by a 2-digit week and is extended by a 2-digit factory code.

Description (Fig. A)

⚠ ***WARNING:*** *Never modify the vacuum or any part of it. Damage or personal injury could result.*

1 Extension pole
2 Main unit
3 Extension pole release button
4 Floor head
5 Floor head release button
6 Battery pack
7 Battery release button
8 Power button
9 LED screen
10 Mode button
11 Beater bar button
12 Canister release buttons
13 Canister
14 Edge brush floor head (BSV525BLPA only)
15 Crevice tool
16 2in1 brush tool
17 Pet head
18 Dust brush
19 Date code

ASSEMBLY AND ADJUSTMENTS (Fig. B)

⚠ ***WARNING: To reduce the risk of serious personal injury, turn unit off and remove the battery pack before making any adjustments or removing/installing attachments or accessories.*** *An accidental start-up can cause injury.*

1. Align the extension pole **1** to the bottom of the main unit **2** with the extension pole release button **3** facing up and push until the button locks onto the main unit.

NOTE: The extention pole does not need to be used. The floor head **4** may be attached directly to the main unit.

2. Align the floor head to the bottom of the extention pole or main unit and push until the floor head release button **5** locks onto the extention pole or main unit

⚠ ***WARNING:*** *When not in use, position the upright unit with the rear of the vacuum facing a wall so that any inadvertent fall of the unit would contact a wall and not people or pets.*

Attaching Accessories (Fig. A, C)

1. Ensure the floor head **4** is removed.
2. Slide the accessory **17**, **15**, or **16** onto the main unit **2** or the extension pole **1** until it locks into place.

OPERATION

⚠ ***WARNING: To reduce the risk of serious personal injury, turn unit off and remove battery pack before making any adjustments or removing/installing attachments or accessories.*** *An accidental start-up can cause injury.*

Installing and Removing the Battery Pack (Fig. D)

⚠ ***WARNING:*** *Ensure the appliance is in the off position before inserting the battery pack.*

NOTE: For best results, make sure your battery pack **6** is fully charged.

1. To install the battery pack into the vacuum, align the battery pack with the rails inside the handle and slide it into the handle until the battery pack is firmly seated in the vaccum and ensure it does not disengage.
2. To remove the battery pack from the vacuum, press the battery pack release button **7** and firmly pull the battery pack out of the handle.

Setting Functions (Fig. E)

On and Off

- To switch the vacuum on, push the power button **8**.
- The state of charge indicator on the LED screen **9** will illuminate while the vacuum is on, indicating the percentage of charge left in the battery.
- To switch the vaccum off, push the power button a second time.

Set Mode

This vacuum can be adjusted to operate at a lower suction level to extend runtime or higher suction level to pick up debris that requires more power.

- With the vacuum on, press the mode button **10** to increase suction power.
- To decrease power, press the mode button a second time.

Beater Bar

- To turn the beater bar on, press the beater bar button **11**.
- To turn the beater bar off, press the beater bar button a second time.

Remove and Attach Lift Away Canister (Fig. F, G)

To Remove Canister (Fig. F)

1. Press the two lift away canister release buttons **12**.
2. Pull the lift away canister **13** away from the vacuum.

To Attach Canister (Fig. G)

1. Align the canister attachment hole **20** with the canister nub **21** on the vacuum and slide the canister onto the nub of the vacuum.
2. Push the top of the canister into the vacuum until it locks into position.

Edge Brush (Fig. H) (BSV525BLPA Only)

The vacuum is equipped with an edge brush **14** on either side of the floor head **4**. These brushes help clean hard-to-reach places such as under cabinets.

MAINTENANCE

Your vacuum has been designed to operate over a long period of time with a minimum of maintenance. Continuous satisfactory operation depends upon proper tool care and regular cleaning.

⚠ ***WARNING: To reduce the risk of serious personal injury, turn tool off and disconnect battery pack before making any adjustments or removing/installing attachments or accessories.*** *An accidental start-up can cause injury.*

⚠ ***WARNING:*** *For user servicing, the machine must be dismantled, cleaned and serviced, as far as is reasonably practicable, without causing risk to the user and others. Suitable precautions include decontamination before dismantling, provision for local filtered exhaust ventilation where the machine is dismantled, cleaning of the maintenance area and suitable personal protection.*

- *The manufacturer, or an instructed person, shall perform a technical inspection at least annually consisting of, for example, inspection of filters for damage, air tightness of the machine and proper function of the control mechanism.*
- *When carrying out service or repair operations, all contaminated items which cannot be satisfactorily cleaned, are to be disposed of; such items shall be disposed of in impervious bags in accordance with any current regulation for the disposal of such waste.*

The charger and battery pack are not serviceable.

Cleaning

⚠ ***WARNING:*** *Before performing any maintenance on cordless appliance remove the battery.*

- Regularly clean the ventilation slots in your appliance using a soft brush or dry cloth.
- Regularly clean the motor housing, using a damp cloth.
- Do not use any abrasive or solvent-based cleaner.

⚠ ***WARNING:*** *Projectile/Respiratory Hazard: Never use the vac without its filter.*

NOTE: The filters are reusable, so do not confuse them with a disposable dust bag, and do not throw them away when the product is emptied. We recommend that you replace the filter every 6–9 months depending on frequency of use.

There are two methods of cleaning the canister, a quick empty method and a thorough clean method.

Quick Empty Method (Fig. F, I, J)

Emptying the Dust Canister

- Press the two lift away canister release buttons **12** to release and remove the lift away canister **13**.
- Pull the top of the canister upward to remove the top/bottom filter **22**.
- Pull the internal filter **23** up and out of the canister.
- Place the canister over a trash bin and tip upside down to empty the canister.
- To resassemble, slide the internal filter back into place and cover with the top/bottom filter ensuring the two arrows line up.

Thorough Clean Method

Removing Canister Filters (Fig. F, I, J)

1. Press the two lift away canister release buttons **12** to release and remove the lift away canister **13**.

• Pull the top of the canister upward to remove the top/bottom filter **22**.

2. Pull the internal filter **23** up and out of the canister.

Removing Air Filter (Fig. K)

BSV520BL, BSV525BL, BSV525BLPA only

1. To access the anti-allergy filtration air filter **24** on the back of the vacuum, pull on the air filter tab **25** to release the air filter cover **26**.

2. Pull the air filter away from the cover.

Cleaning Filters

1. Shake or lightly brush any loose dust off filters. You may also use the supplied small dust brush **18**.

2. Rinse out the dust canister with warm soapy water.

3. Wash the filters with warm soapy water.

4. Allow 24 hours to ensure the filters are dry before replacing.

5. Refit the filters into the appliance and replace the canister.

IMPORTANT: Maximum dust collection will only be obtained with a clean filter and an empty dust canister. If dust begins to fall back out of the product after it is switched off, this indicates that the canister is full and requires emptying.

• Wash the filters regularly using warm, soapy water and ensure that it is completely dry before using again. The cleaner the filter is, the better the product will perform.

• It is very important that the filters are correctly in position before use.

Removing and Cleaning Beater Bar (Fig. N, O) (BSV525BLPA Only)

⚠ ***WARNING:*** *To reduce the risk of injury from moving parts, disconnect lift away canister before cleaning or servicing beater bar.*

1. Remove battery pack.

2. To remove the beater bar **27** from the floor head **4**, depress the beater bar release button **28**. The beater bar will pop from its locked position.

3. The beater bar can now be removed. The end pieces are also removable, allowing you to clear the brushes from any hair or other debris that may have accumulated.

Removing and Cleaning Beater Bar (Fig. N, O) (BSV525BLPA Only)

⚠ ***WARNING:*** *To reduce the risk of injury from moving parts, disconnect lift away canister before cleaning or servicing beater bar.*

1. Remove battery pack.

2. To remove the beater bar **27** from the floor head **4**, slide the beater bar release button **28** towards the rear of the floor head.

3. With the beater bar assembly **29** released from the floor head, slide the beater bar assembly completely out of the floor head.

4. Wipe away any dust or debris on the beater bar.

5. Pull the beater bar away from the beater bar assembly and remove any debris or hair in this area.

6. Reinstall the beater bar onto the assembly by aligning the D shaped slot on the beater bar with the D shaped shaft on the assembly and press firmly to ensure it is secured in position.

7. Slide the beater bar assembly back into the side of the floor head and push in until a click is heard.

Removing and Installing the Edge Brushes (Fig. P) (BSV525BLPA Only)

1. Locate the edge brush screw **30**.

2. Use a cross head screwdriver to remove the edge brush screw to release the edge brush **14**.

3. Pull the edge brush away from the beater bar assembly **29**.

4. Wipe away any dust or debris on the edge brush.

5. Reinstall the edge brush by aligning the shaft into the slot on the side of the floor head.

6. Press firmly into place and install the edge brush screw. Use a cross head screwdriver to tighten the screw into position.

7. Gently tug on the edge brush to ensure it is held securely in place before using.

Replacing the Filters

The filters should be replaced every 6 to 9 months and whenever worn or damaged. Replacement filters are available from your BLACK+DECKER dealer.

Visit **www.blackanddecker.com** to locate dealers.

• Remove the old filters as described in ***Cleaning Filters***.

• Fit the new filters as described in ***Cleaning Filters***.

These fit all units. When these filters reach the end of their lifespan they must be disposed of at a local recycling center.

⚠ ***WARNING:*** *Blow dirt and dust out of the main housing with dry air as often as dirt is seen collecting in and around the air vents. Wear approved eye protection and approved dust mask when performing this procedure.*

⚠ ***WARNING:*** *Never use solvents or other harsh chemicals for cleaning the non-metallic parts of the tool. These chemicals may weaken the materials used in these parts. Use a cloth dampened only with water and mild soap. Never let any liquid get inside the tool; never immerse any part of the tool into a liquid.*

Protecting the Environment



Products/batteries are recyclable, but if marked with the crossed-out bin, they must not be disposed of with normal household waste.

Run the batteries down completely and separate them, and separate any light sources from the product if possible. It is the user's responsibility to delete personal data from the product. Then take the waste to an official waste collection center or a participating retailer who will often accept it free of charge. Packaging should be discarded based on the marked material code. Operating and safety instructions should only be discarded once the applicable product is no longer in use.

Please check with your local community/municipality for waste management guidance. For further information, visit **www.2helpU.com** and scan the above QR code.

Guarantee

Black & Decker is confident of the quality of its products and offers consumers a 24 month guarantee from the date of purchase. This guarantee is in addition to and in no way prejudices your statutory rights. The guarantee is valid within the territories of the Member States of the European Union and the European Free Trade Area and te United Kingdom. To claim on the guarantee, the claim must be in accordance with Black&Decker Terms and Conditions and you will need to submit proof of purchase to the seller or an authorised repair agent.

Terms and conditions of the Black&Decker 2 year guarantee and the location of your nearest authorised repair agent can be obtained on the Internet at **www.2helpU.com**, or by contacting your local Black & Decker office at the address indicated in this manual.

Please visit our website **d** to register your new Black & Decker product and receive updates on new products and special offers.

Australia & New Zealand www.blackanddecker.com.au www.blackanddecker.co.nz	Australia & New Zealand Stanley Black & Decker 810 Whitehorse Road Box Hill VIC 3128, Australia	Tel. 1800 338 002 (Aust) Tel. 0800 339 258 (NZ)
België/Belgique/Luxembourg www.blackanddecker.be enduser.be@sbdinc.com	Stanley Black & Decker Belgium BVBA Egide Walschaertsstraat 16 2800 Mechelen	Tel. NL +32 15 47 37 65 Tel. FR +32 15 47 37 66 Fax +32 15 47 37 99
Danmark	Black & Decker Roskildevej 22 2620 Albertslund	kundeservice.dk@sbdinc.com www.blackanddecker.dk
Deutschland www.blackanddecker.de infobfge@sbdinc.com	Stanley Black & Decker Deutschland Gmbh Richard-Klinger-Strasse 11 65510 Idstein, Deutschland	Tel. 06126 21-0 Fax 06126 21-2980
Ελλάδα www.blackanddecker.gr greece.service@sbdinc.com **SERVICE:**	Stanley Black & Decker (ΕΛΛΑΣ) Ε.Π.Ε ΓΡΑΦΕΙΑ:Στράβωνος 7 & Βουλιαγμένης 166 74 Γλυφάδα - Αθήνα Ημερος Τόπος 2 -Χάνι Αδάμ 193 00 Ασπρόπυργος - Αθήνα	Τηλ. 210-8981616 Φαξ 210-8983570 Τηλ. Service 210-8985208 Φαξ 210-5597598
España www.blackanddecker.es respuesta.posventa@sbdinc.com	Stanley Black & Decker Ibérica, S.C.A. Parc de Negocis "Mas Blau" Edificio Muntadas, c/Bergadá, 1, Of. A6 08820 El Prat de Llobregat (Barcelona)	Tel. 934 797 400 Fax 934 797 419
France www.blackanddecker.fr	Black & Decker (France) S.A.S. 5 allée des Hêtres B.P. 30084 69579 Limonest Cédex	Tel. 04 72 20 39 20 Fax 04 72 20 39 00
Helvetia www.blackanddecker.ch service@rofoag.ch	ROFO AG Gewerbezone Seeblick 3213 Kleinbösingen	Tel. 026-6749393 Fax 026-6749394
Italia www.blackanddecker.it service.italia@sbdinc.com	Stanley Black & Decker Italia Via Energypark 6 20871 Vimercante (MB)	Tel. 039-9590200 Fax 039-9590313 Numero verde 800-213935
Nederland www.blackanddecker.nl enduser.nl@sbdinc.com	Stanley Black & Decker Netherlands BV Holtum Noordweg 35, 6121 RE BORN Postbus 83, 6120 AB BORN	Tel. +31 164 283 065 Fax +31 164 283 200
Norge	Black & Decker Postboks 4613, Nydalen 0405 Oslo	kundeservice.no@sbdinc.com www.blackanddecker.no
Österreich www.blackanddecker.at service.austria@sbdinc.com	Stanley Black & Decker Austria GmbH Oberlaaerstraße 248, A-1230 Wien	Tel. 01 66116-0 Fax 01 66116-614
Portugal www.blackanddecker.pt resposta.posvenda@sbdinc.com	Black & Decker Limited SARL Quinta da Fonte - Edifício Q55 D. Diniz Rua dos Malhões, 2 e 2A - Piso 2 Esquerdo 2770 - 071 Paço de Arcos	Tel. 214667500 Fax 214667580
Suomi	Black & Decker PL47 00521, Helsinki	asiakaspalvelu.fi@sbdinc.com www.blackanddecker.fi
Sverige	Black & Decker AB Box 94, 431 22 Mölndal	kundeservice.se@sbdinc.com www.blackanddecker.se
Türkiye https://tr.blackanddecker.global info-tr@sbdinc.com	Stanley Black & Decker Turkey Alet Üretim Tic. Ltd.Şti. İçerenköy Mahallesi Umut Sokak No: 10-12 / 82-83-84 Kat: 19 Ataşehir-İstanbul, Türkiye	Tel. +90 216 665 2900 Faks: +90 216 665 2901 Servis Bilgi Tel. +90 216 912 2313
United Kingdom & **Republic Of Ireland** www.blackanddecker.co.uk emeaservice@sbdinc.com	Black & Decker Meadowfield Avenue, Spennymoor DL16 6YJ, England	Tel. +44 (0)1753 511234 Fax +44 (0)1753 512365
Middle East & Africa www.blackanddecker.ae service.mea@sbdinc.com	Black & Decker P.O. Box - 17164 Jebel Ali Free Zone (South), Dubai, UAE	Tel. +971 4 8863030 Fax +971 4 8863333