BLACK+
DECKER™

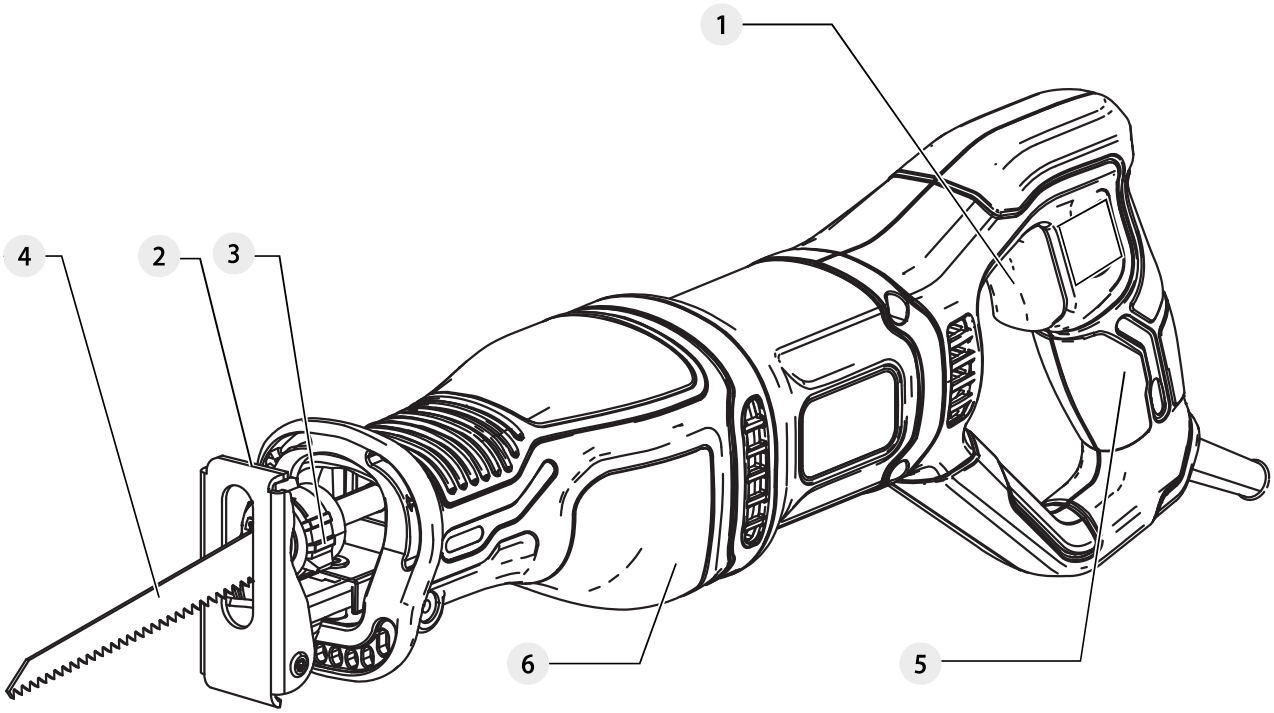

www.blackanddeckertools.eu

BES301

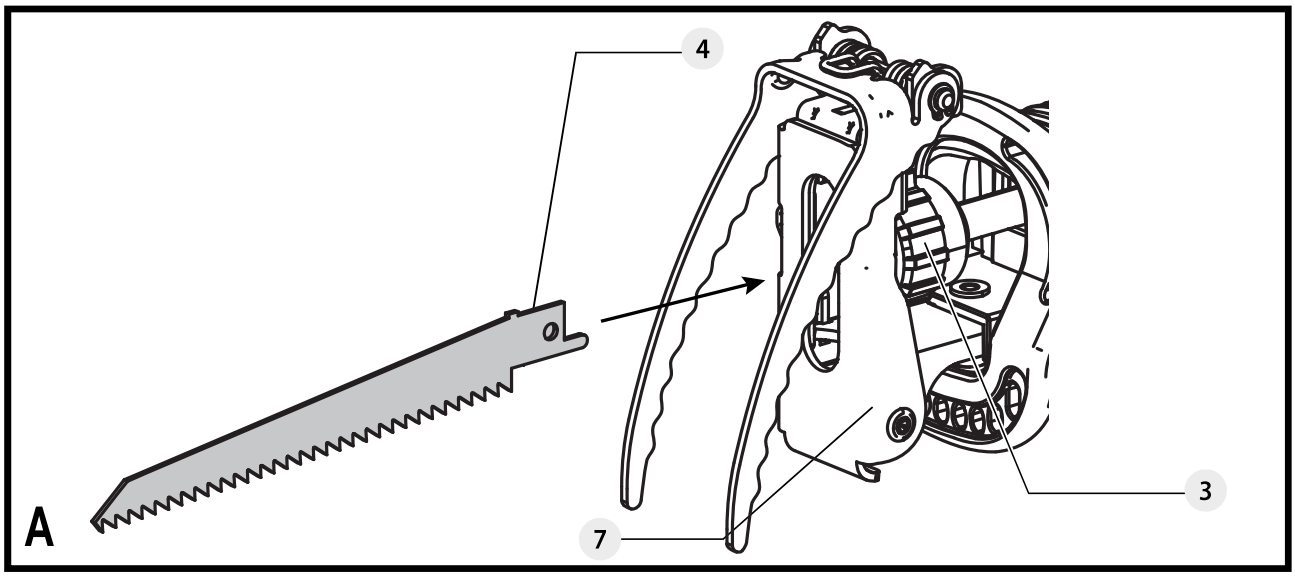
4
3
7
A

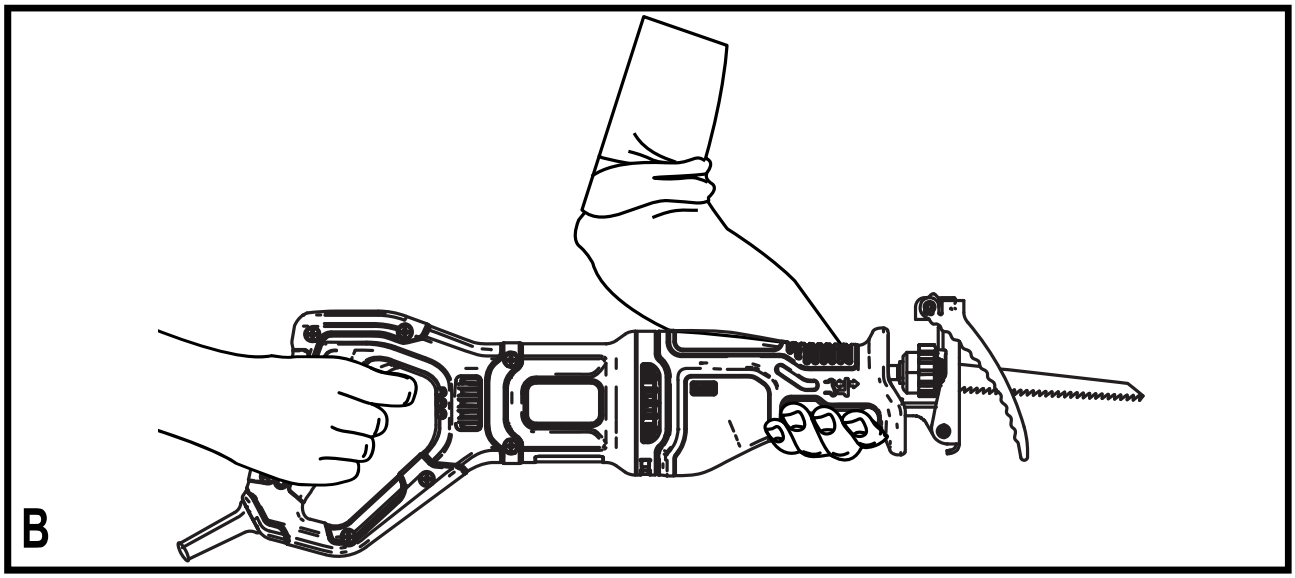
B

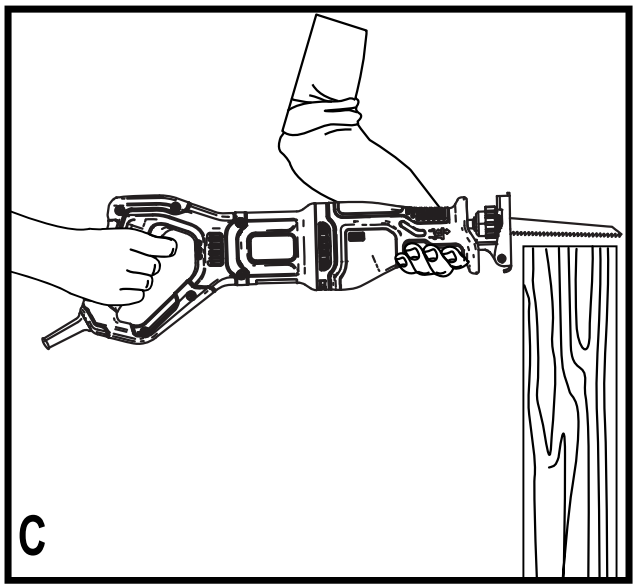
C

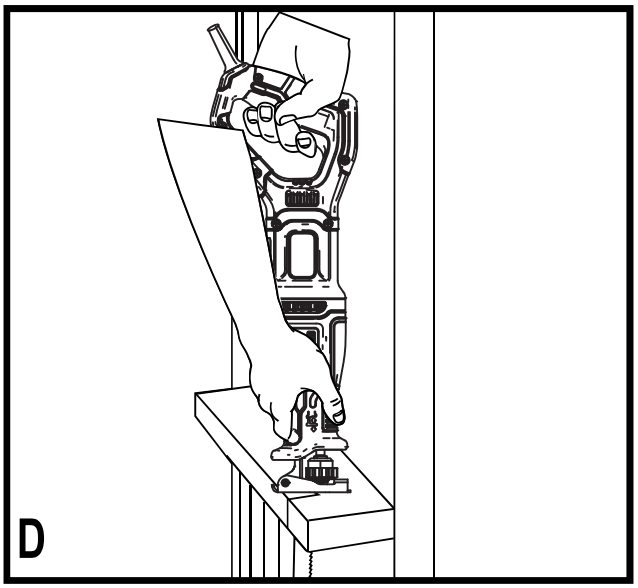
D

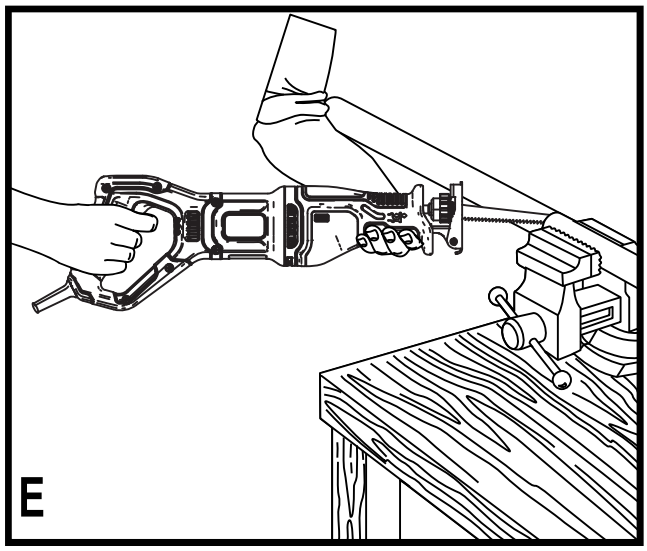
E

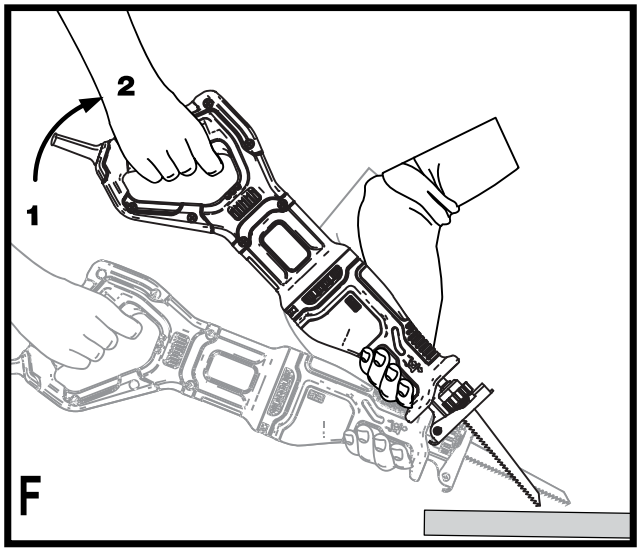
2
1
F

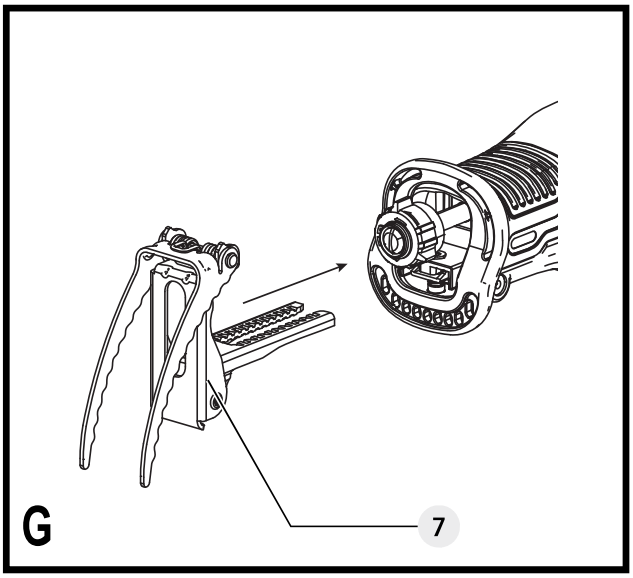
7
G

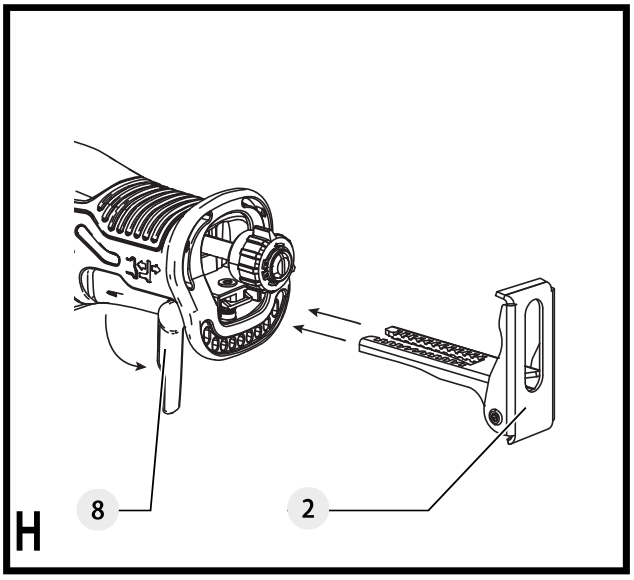
8
2
H

Intended use

Your BLACK+DECKER BES301 saw has been designed for sawing wood, plastics, and sheet metal. This tool is intended for consumer use only.

Safety instructions

General power tool safety warnings



Warning! Read all safety warnings, instructions, illustrations and specifications provided with this power tool. Failure to follow all instructions listed below may result in electric shock, fire and/or serious injury.

Save all warnings and instructions for future reference.

The term "power tool" in the warnings refers to your mains operated (corded) power tool or battery operated (cordless) power tool.

1. **Work area safety**
   a. **Keep work area clean and well lit.** Cluttered or dark areas invite accidents.
   b. **Do not operate power tools in explosive atmospheres, such as in the presence of flammable liquids, gases or dust.** Power tools create sparks which may ignite the dust or fumes.
   c. **Keep children and bystanders away while operating a power tool.** Distractions can cause you to lose control.
2. **Electrical safety**
   a. **Power tool plugs must match the outlet. Never modify the plug in any way.**
   Do not use any adapter plugs with earthed (grounded) power tools. Unmodified plugs and matching outlets will reduce risk of electric shock.
   b. **Avoid body contact with earthed or grounded surfaces such as pipes, radiators, ranges and refrigerators.** There is an increased risk of electric shock if your body is earthed or grounded.
   c. **Do not expose power tools to rain or wet conditions.** Water entering a power tool will increase the risk of electric shock.
   d. **Do not abuse the cord. Never use the cord for carrying, pulling or unplugging the power tool. Keep cord away from heat, oil, sharp edges or moving parts.** Damaged or entangled cords increase the risk of electric shock.
   e. **When operating a power tool outdoors, use an extension cord suitable for outdoor use.** Use of a cord suitable for outdoor use reduces the risk of electric shock.
   f. **If operating a power tool in a damp location is unavoidable, use a residual current device (RCD) protected supply.** Use of an RCD reduces the risk of electric shock.
3. **Personal safety**
   a. **Stay alert, watch what you are doing and use common sense when operating a power tool.**
   Do not use a power tool while you are tired or under the influence of drugs, alcohol or medication. A moment of inattention while operating power tools may result in serious personal injury.
   b. **Use personal protective equipment. Always wear eye protection.** Protective equipment such as a dust mask, non-skid safety shoes, hard hat, or hearing protection used for appropriate conditions will reduce personal injuries.
   c. **Prevent unintentional starting. Ensure the switch is in the off-position before connecting to power source and/or battery pack, picking up or carrying the tool.** Carrying power tools with your finger on the switch or energising power tools that have the switch on invites accidents.
   d. **Remove any adjusting key or wrench before turning the power tool on.** A wrench or a key left attached to a rotating part of the power tool may result in personal injury.
   e. **Do not overreach. Keep proper footing and balance at all times.** This enables better control of the power tool in unexpected situations.
   f. **Dress properly. Do not wear loose clothing or jewellery. Keep your hair and clothing away from moving parts.** Loose clothes, jewellery or long hair can be caught in moving parts.
   g. **If devices are provided for the connection of dust extraction and collection facilities, ensure these are connected and properly used.** Use of dust collection can reduce dust-related hazards.
   h. **Do not let familiarity gained from frequent use of tools allow you to become complacent and ignore tool safety principles.** A careless action can cause severe injury within a fraction of a second.
4. **Power tool use and care**
   a. **Do not force the power tool. Use the correct power tool for your application.**
   The correct power tool will do the job better and safer at the rate for which it was designed.
   b. **Do not use the power tool if the switch does not turn it on and off.** Any power tool that cannot be controlled with the switch is dangerous and must be repaired.
   c. **Disconnect the plug from the power source and/or remove the battery pack, if detachable, from the power tool before making any adjustments, changing accessories,** or storing power tools. Such preventive safety measures reduce the risk of starting the power tool accidentally.
   d. **Store idle power tools out of the reach of children and do not allow persons unfamiliar with the power tool or these instructions to operate the power**

tool. Power tools are dangerous in the hands of untrained users.

e. **Maintain power tools and accessories. Check for misalignment or binding of moving parts, breakage of parts and any other condition that may affect the power tools operation. If damaged, have the power tool repaired before use.** Many accidents are caused by poorly maintained power tools.

f. **Keep cutting tools sharp and clean.** Properly maintained cutting tools with sharp cutting edges are less likely to bind and are easier to control.

g. **Use the power tool, accessories and tool bits etc. in accordance with these instructions, taking into account the working conditions and the work to be performed.**
Use of the power tool for operations different from those intended could result in a hazardous situation.

h. **Keep handles and grasping surfaces dry, clean and free from oil and grease.** Slippery handles and grasping surfaces do not allow for safe handling and control of the tool in unexpected situations.

5. **Service**

a. **Have your power tool serviced by a qualified repair person using only identical replacement parts.** This will ensure that the safety of the power tool is maintained.

Additional Power Tool Safety Warnings

- **Hold the power tool by insulated gripping surfaces, when performing an operation where the cutting accessory may contact hidden wiring or its own cord.** Cutting accessory contacting a “live” wire may make exposed metal parts of the power tool “live” and could give the operator an electric shock.
- **Use clamps or another practical way to secure and support the workpiece to a stable platform.** Holding the workpiece by hand or against your body leaves it unstable and may lead to loss of control.
- **Keep hands away from cutting area.** Never reach underneath the work piece any reason. Do not insert fingers or thumb into the vicinity of the reciprocating blade and blade clamp. Do not stabilize the saw by gripping the shoe.
- **Keep blades sharp.** Dull or damaged blades may cause the saw to swerve or stall under pressure. Always use the appropriate type of saw blade for the workpiece material and type of cut.
- **When cutting pipe or conduit, make sure that they are free from water, electrical wiring, etc.**
- **Do not touch the workpiece or the blade immediately after operating the tool.** They can become very hot.
- **Be aware of hidden hazards, before cutting into walls, floors or ceilings, check for the location of wiring and pipes.**
- **The blade will continue to move after releasing the switch.** Always switch the tool off and wait for the saw blade to come to a complete standstill before putting the tool down.



Warning! Contact with, or inhalation of dusts arising from cutting applications may endanger the health of the operator and possible bystanders. Wear a dust mask specifically designed for protection against dust and fumes and ensure that persons within or entering the work area are also protected.

a. **Maintain a firm grip with both hands on the saw**
The intended use is described in this instruction manual. The use of any accessory or attachment or performance of any operation with this tool other than those recommended in this instruction manual may present a risk of personal injury and/or damage to property.

Residual Risks

Additional residual risks may arise when using the tool which may not be included in the enclosed safety warnings. These risks can arise from misuse, prolonged use etc.
Even with the application of the relevant safety regulations and the implementation of safety devices, certain residual risks can not be avoided. These include:

- Injuries caused by touching any rotating/moving parts.
- Injuries caused when changing any parts, blades or accessories.
- Injuries caused by prolonged use of a tool. When using any tool for prolonged periods ensure you take regular breaks.
- Impairment of hearing.
- Health hazards caused by breathing dust developed when using your tool (example:- working with wood, especially oak, beech and MDF.)

Safety of others

- This tool is not intended for use by persons (including children) with reduced physical, sensory or mental capabilities, or lack of experience and knowledge, unless they have been given supervision or instruction concerning use of the tool by a person responsible for their safety.
- Children should be supervised to ensure that they do not play with the appliance.

Vibration

The declared vibration emission values stated in the technical data and the declaration of conformity have been measured in accordance with a standard test method provided by EN62841 and may be used for comparing one tool with another. The declared vibration emission value may also be used in a preliminary assessment of exposure.

Warning! The vibration emission value during actual use of the power tool can differ from the declared value depending on the ways in which the tool is used. The vibration level may increase above the level stated.

When assessing vibration exposure to determine safety measures required by 2002/44/EC to protect persons regularly using power tools in employment, an estimation of vibration exposure should consider, the actual conditions of use and the way the tool is used, including taking account of all parts of the operating cycle such as the times when the tool is switched off and when it is running idle in addition to the trigger time.

Labels on tool

The following symbols are shown on the tool along with the date code:

Warning! To reduce the risk of injury, the user must read the instruction manual.

Electrical safety

This tool is double insulated; therefore no earth wire is required. Always check that the power supply corresponds to the voltage on the rating plate.

- If the supply cord is damaged, it must be replaced by the manufacturer or an authorised BLACK+DECKER Service Centre in order to avoid a hazard.

Features

This tool includes some or all of the following features.

1. Variable speed on/off switch
2. Adjustable shoe
3. Blade clamp collar
4. Blade
5. Main handle
6. Secondary gripping handle
7. Branch holder
8. Shoe release lever

Assembly

Warning! Before attempting any of the following operations, make sure that the tool is switched off and unplugged and that the saw blade has stopped. Used saw blades may be hot.

Fitting the saw blade (Fig. A)

- Hold the tool away from the body.
- Rotate the blade clamp collar (3).
- Insert the shank of the blade (4) fully into the blade clamp collar (3).
- Release the blade clamp collar (3) to lock the blade into position.
- **Note:** The blade can be installed with the teeth up to assist in flush cutting.

Removing the saw blade (Fig. A)

Warning! Burn hazard: Do not touch the blade immediately after use. Contact with the blade may result in personal injury.

- Rotate the blade clamp collar (3) to the release position.
- Remove blade (4).

Assemble shoe (Fig. A, H)

Warning! To reduce the risk of serious personal injury, turn unit off and disconnect it from power source and remove the blade before making any adjustments or removing/installing attachments or accessories. An accidental start-up can cause injury.

- Remove the blade.
- Push the shoe release lever (8) downwards and slide the adjustable shoe (2) into the desired setting.
- Push the shoe release lever (8) upwards to tighten the shoe.
- To remove the shoe, push the shoe release lever (8) downwards and slide out the shoe.

Adjustable shoe (Fig. A)

Warning! To reduce the risk of serious personal injury, turn unit off and disconnect it from power source and remove the blade before making any adjustments or removing/installing attachments or accessories. An accidental start-up can cause injury.

- The shoe (2) will adjust to limit the depth of cut.
- Hold the saw with the underside facing up.
- Push the shoe release lever (8) downwards and slide the shoe (2) out to the desired setting and push the shoe release lever back into position.

Removable branch holder (Fig. A, G)

Warning! To reduce the risk of serious personal injury, turn unit off and disconnect it from power source and remove the blade before making any adjustments or removing/installing attachments or accessories. An accidental start-up can cause injury.

Your tool is provided with a removable branch holder (7) to assist in cutting branches.

- Remove the blade.
- Push the shoe release lever (8) downwards and slide the removable branch holder (7) into the desired setting..
- Push the shoe release lever (8) upwards to tighten the removable branch holder.
- To remove the removable branch holder, push the shoe release lever (8) downwards and slide out the removable branch holder..

Use

Switching on and off

The variable speed on/off switch offers a choice of speeds for greatly improved cutting rates in various materials.

- To switch the tool on, squeeze the variable speed on/off switch (1).
- To switch the tool off, release the variable speed on/off switch (1).

Correct hand position (Fig. B)

Warning! To reduce the risk of serious personal injury, ALWAYS use correct hand position as shown.

Warning! To reduce the risk of serious personal injury, ALWAYS hold securely in anticipation of a sudden reaction.

Correct hand position requires one hand on the hand grip (6) , with the other hand on the main handle (5) .

Sawing (Fig. B, C)

- Always hold the tool with both hands.
- Let the blade run freely for a few seconds before starting the cut.
- Apply only a gentle pressure to the tool while performing the cut.
- If possible, work with the adjustable shoe (2) pressed against the workpiece. This will improve tool control and reduce tool vibration, as well as prevent the blade from being damaged.

Hints for optimum use

Sawing wood (Fig. C)

- Clamp the workpiece securely and remove all nails and metal objects.
- Holding the tool with both hands, work with the shoe (2) pressed against the workpiece.

Flush cutting (Fig. D)

The compact design of the reciprocating saw motor housing and pivoting shoe permit close cutting to floors, corners and other difficult areas.

To maximize flush cutting capabilities:

- Insert the blade shaft into the blade clamp with the teeth of the blade facing up.
- Turn the saw upside down so you are as close to the work surface as possible.

Sawing metal (Fig. E)

Be aware that sawing metal takes much more time than sawing wood.

- Use a saw blade suitable for sawing metal. Use a fine-tooth saw blade for ferrous metals and a coarser saw blade for non-ferrous metals.
- When cutting thin sheet metal, clamp a piece of scrap wood to the back surface of the workpiece and cut through this sandwich.
- Spread a film of oil along the intended line of cut.

Pocket cutting in wood (Fig. F)

- Measure and mark the required pocket cut.
- Fit a saw blade suitable for pocket cutting.
- Rest the shoe (2) on the workpiece in such a position that the blade forms an appropriate angle for the pocket cut.
- Switch on the tool and slowly feed the blade into the workpiece. Make sure that the shoe (2) remains in contact with the workpiece at all times.

Cutting branches

Branches up to 25 mm in diameter can be cut with this tool.

Warning! Do not use the tool while in a tree, on a ladder or on any other unstable surface. Be aware of where the branch will fall.

- Cut downward and away from your body.
- Make the cut close to the main branch or tree body.
- To use the branch holder, hook the sprung arm over the branch and make sure the branch is positioned between the arm and the shoe.

Vertical cutting

The tool allows close cutting to corners and other difficult areas.

- Insert the shank of the saw blade into the blade holder with the teeth of the blade facing upward.
- Hold the tool with the shoe (2) facing downward so that you are as close to the work surface as possible.
- Cut forward and away from your body.

Accessories

The performance of your tool depends on the accessory used. BLACK+DECKER accessories are engineered to high quality standards and designed to enhance the performance of your tool. By using these accessories you will get the very best from your tool.

Blades

The saw will accept a blade up to 30 cm long. Always use the shortest blade suitable for your project but long enough to keep the blade cutting through the material. Longer blades are more likely to be bent or damaged during use. During operation some longer blades may vibrate or shake if the saw is not kept in contact with the workpiece.

Maintenance

Your BLACK+DECKER tool has been designed to operate over a long period of time with a minimum of maintenance. Continuous satisfactory operation depends upon proper tool care and regular cleaning.

Warning! Before performing any maintenance on the tool, unplug the tool.

- Regularly clean the ventilation slots in your tool using a soft brush or dry cloth.
- Regularly clean the motor housing using a damp cloth. Do not use any abrasive or solvent-based cleaner.

Protecting the environment



Separate collection. Products and batteries marked with this symbol must not be disposed of with normal household waste.

Products and batteries contain materials that can be recovered or recycled, reducing demand for raw materials. Please recycle electrical products and batteries according to local provisions. Further information is available at www.2helpU.com

Technical data		
Input Voltage	V_{AC}	230
No-load speed	Min $^{-1}$	0 - 2800
Stroke length	mm	20
Weight	kg	2.4
Cutting capacity		
Wood	mm	300
Steel	mm	100

Level of sound pressure according to EN62841:
Sound pressure (L_{pA}) at work station 88.5 dB(A), uncertainty (K) 5 dB(A) Sound power (L_{WA}) 99.5 dB(A), uncertainty (K) 5 dB(A)
Vibration total values (triax vector sum) according to EN62841:
Cutting board ($a_{h,B}$) 14.8 m/s^2, uncertainty (K) 1.5 m/s^2
Cutting wooden beams ($a_{h,WB}$) 16.3 m/s^2, uncertainty (K) 1.5 m/s^2

EC declaration of conformity

MACHINERY DIRECTIVE

CE

BES301 Reciprocating Saw

Black & Decker declares that these products described under “technical data” are in compliance with: EN62841-1:2015 , EN62841-2-11:2016.

These products also comply with Directive 2006/42/EC, 2014/30/EU and 2011/65/EU. For more information, please contact Black & Decker at the following address or refer to the back of the manual.

The undersigned is responsible for compilation of the technical file and makes this declaration on behalf of Black & Decker.



Ed Higgins
Director - Consumer Power Tools
Black and Decker Europe, 270 Bath Road, Slough
Berkshire, SL1 4DX
United Kingdom
25/07/2020

Guarantee

Black & Decker is confident of the quality of its products and offers consumers a 24 month guarantee from the date of purchase. This guarantee is in addition to and in no way prejudices your statutory rights. The guarantee is valid within the territories of the Member States of the European Union and the European Free Trade Area.

To claim on the guarantee, the claim must be in accordance with Black & Decker Terms and Conditions and you will need to submit proof of purchase to the seller or an authorised repair agent.

Terms and conditions of the Black & Decker 2 year guarantee and the location of your nearest authorised repair agent can be obtained on the Internet at www.2helpU.com, or by contacting your local Black & Decker office at the address indicated in this manual.

Please visit our website www.blackanddecker.co.uk to register your new Black & Decker product and receive updates on new products and special offers.

België/Belgique/Luxembourg	Stanley Black & Decker Belgium BVBA	Tel. NL	+32 15 47 37 65
www.blackanddecker.be	Egide Walschaertsstraat 16	Tel. FR	+32 15 47 37 66
enduser.be@sbdinc.com	2800 Mechelen	Fax.	+32 15 47 37 99
Danmark	Black & Decker	kundeservice.dk@sbdinc.com	
	Roskildevej 22	www.blackanddecker.dk	
	2620 Albertslund		
Deutschland	Stanley Black & Decker Deutschland Gmbh	Tel.	06126 21-0
www.blackanddecker.de	Black & Decker Str. 40, D - 65510 Idstein	Fax	06126 21-2980
infobdge@sbdinc.com			
Ελλάδα	Stanley Black & Decker (ΕΛΛΑΣ) Ε.Π.Ε	Τηλ.	210-8981616
www.blackanddecker.gr	ΓΡΑΦΕΙΑ:Στράβωνος 7 & Βουλιαγμένης	Φαξ	210-8983570
greece.service@sbdinc.com	166 74 Γλυφάδα - Αθήνα		
SERVICE:	Ημερος Τόπος 2 -Χάνι Αδάμ	Τηλ. Service	210-8985208
	193 00 Ασπρόπυργος - Αθήνα	Φαξ	210-5597598
España	Stanley Black & Decker Ibérica, S.C.A.	Tel.	934 797 400
www.blackanddecker.es	Parc de Negocis “Mas Blau”	Fax	934 797 419
respuesta.posventa@sbdinc.co	Edificio Muntadas, c/Bergadá, 1, Of. A6		
	08820 El Prat de Llobregat (Barcelona)		
France	Black & Decker (France) S.A.S.	Tel.	04 72 20 39 20
www.blackanddecker.fr	5 allée des Hêtres	Fax	04 72 20 39 00
	B.P. 30084		
	69579 Limonest Cédex		
Helvetia	ROFO AG	Tel.	026-6749393
www.blackanddecker.ch	Gewerbezone Seeblick	Fax	026-6749394
service@rofoag.ch	3213 Kleinbösingen		
Italia	Stanley Black & Decker Italia	Tel.	039-9590200
www.blackanddecker.it	Via Energypark 6	Fax	039-9590313
service.italia@sbdinc.com	20871 Vimercante (MB)	Numero verde	800-213935
Nederland	Stanley Black & Decker Netherlands BV	Tel.	+31 164 283 065
www.blackanddecker.nl	Holtum Noordweg 35, 6121 RE BORN	Fax	+31 164 283 200
enduser.nl@sbdinc.com	Postbus 83, 6120 AB BORN		
Norge	Black & Decker	kundeservice.no@sbdinc.com	
	Postboks 4613, Nydalen	www.blackanddecker.no	
	0405 Oslo		
Österreich	Stanley Black & Decker Austria GmbH	Tel.	01 66116-0
www.blackanddecker.at	Oberlaaerstraße 248, A-1230 Wien	Fax	01 66116-614
service.austria@sbdinc.com			
Portugal	Black & Decker Limited SARL	Tel.	214667500
www.blackanddecker.pt	Quinta da Fonte - Edifício Q55 D. Diniz	Fax	214667580
resposta.posvenda@sbdinc.com	Rua dos Malhões, 2 e 2A - Piso 2 Esquerdo		
	2770 - 071 Paço de Arcos		
Suomi	Black & Decker	asiakaspalvelu.fi@sbdinc.com	
	PL47	www.blackanddecker.fi	
	00521, Helsinki		
Sverige	Black & Decker AB	kundservice.se@sbdinc.com	
	Box 94, 431 22 Mölndal	www.blackanddecker.se	
Türkiye	KALE Hırdavat ve Makina A.Ş.	Tel.	0212 533 52 55
www.blackanddecker.com.tr	Defterdar Mah. Savaklar Cad. No:15	Fax.	0212 533 10 05
	Edirnekapı / Eyüp / İstanbul 34050		
United Kingdom &	Black & Decker	Tel.	01753 511234
Republic Of Ireland	210 Bath Road	Fax	01753 512365
www.blackanddecker.co.uk	Slough, Berkshire SL1 3YD		
emeaservice@sbdinc.com			
Middle East & Africa	Black & Decker	Tel.	+971 4 8863030
www.blackanddecker.ae	P.O.Box - 17164	Fax	+971 4 8863333
service.mea@sbdinc.com	Jebel Ali Free Zone (South), Dubai,		
	UAE		