EN

BLACK+ DECKER™

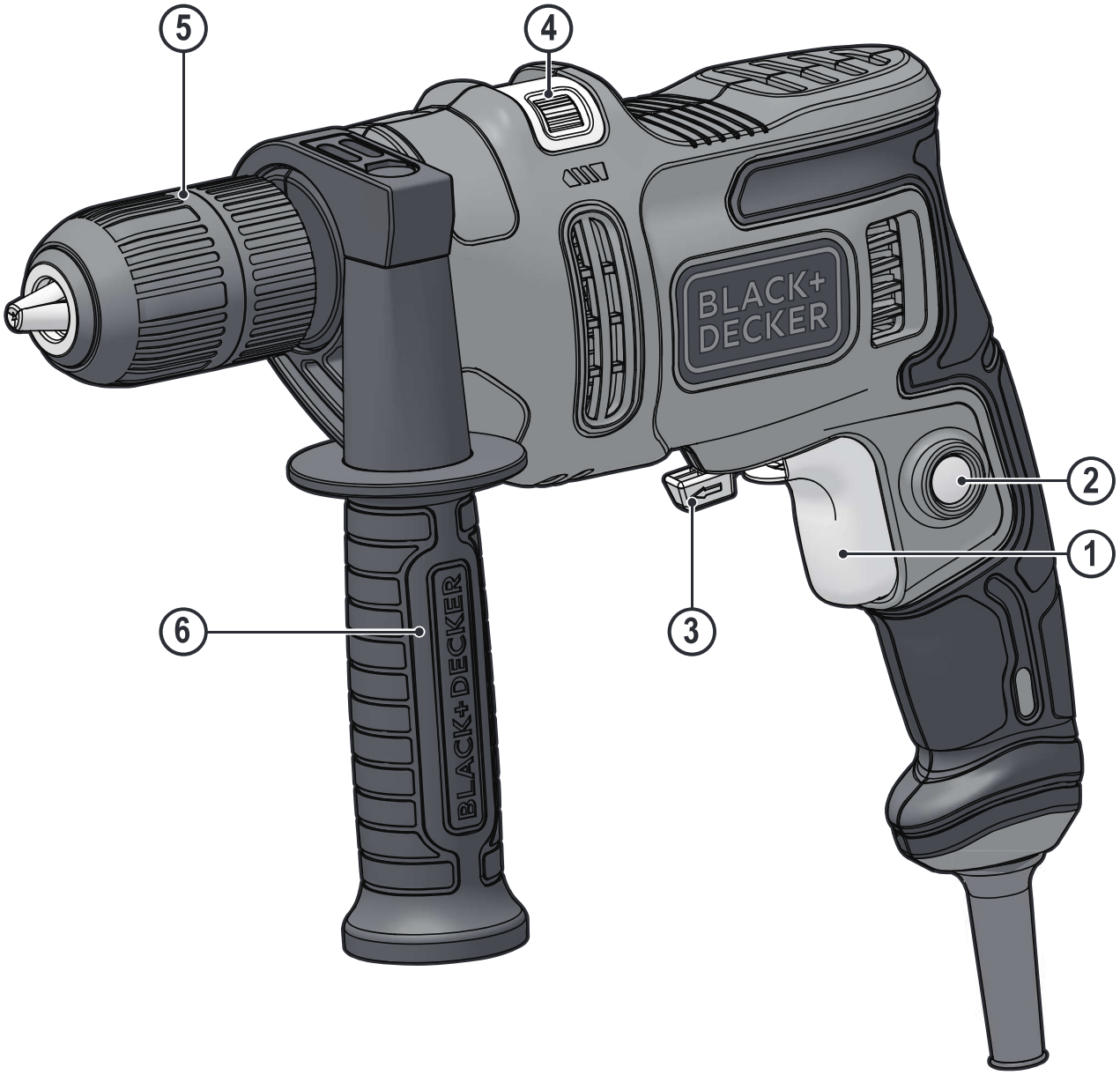

www.blackanddecker.co.uk

BEH200

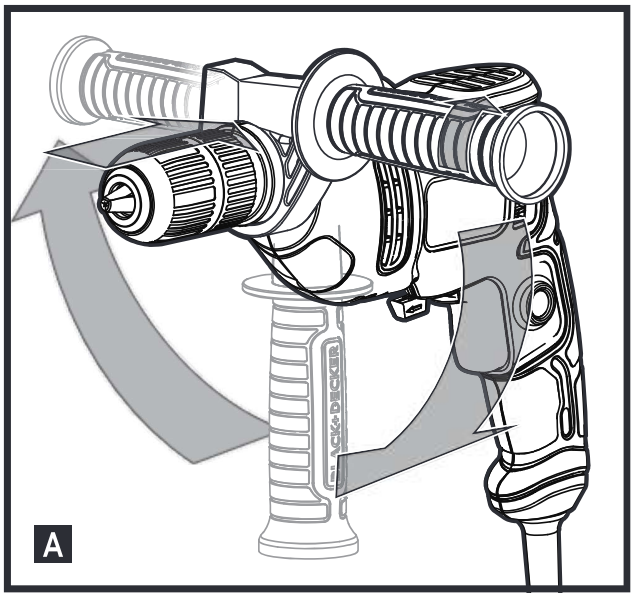

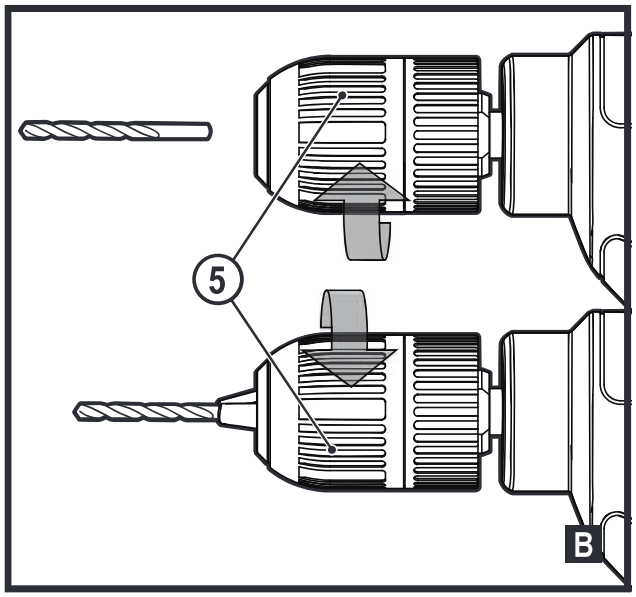

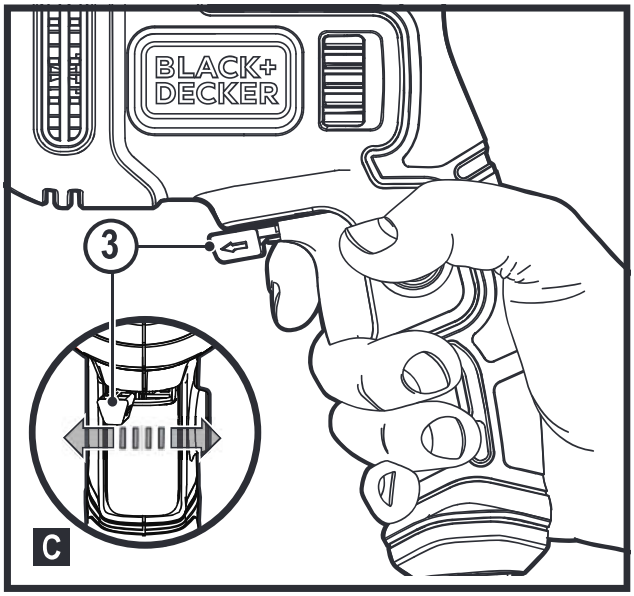

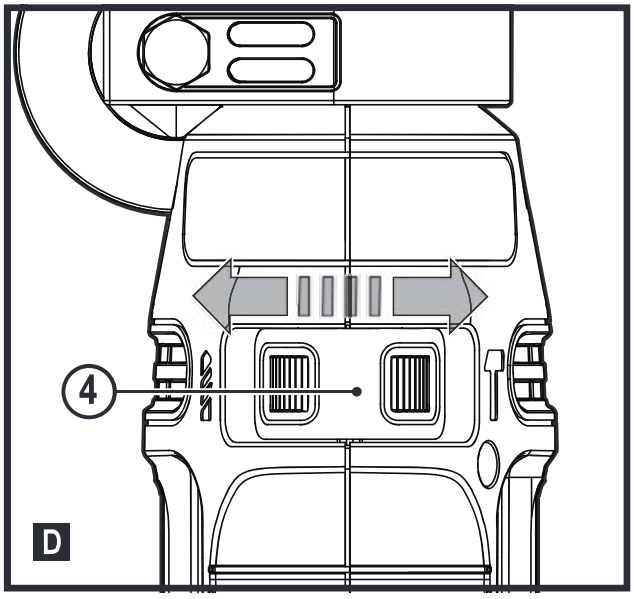

Intended use

Your BLACK+DECKER BEH200 Impact drill has been designed for drilling in wood, metal, plastics, and masonry as well as for screwdriving purposes. This tool is intended for consumer use only.

Safety instructions

General power tool safety warnings

Warning! Read all safety warnings and all instructions. Failure to follow the warnings and instructions listed below may result in electric shock, fire and/or serious injury.

Save all warnings and instructions for future reference. The term "power tool" in the warnings refers to your mains operated (corded) power tool or battery operated (cordless) power tool.

1. Work area safety

a. **Keep work area clean and well lit.** Cluttered or dark areas invite accidents.

b. **Do not operate power tools in explosive atmospheres, such as in the presence of flammable liquids, gases or dust.** Power tools create sparks which may ignite the dust or fumes.

c. **Keep children and bystanders away while operating a power tool.** Distractions can cause you to lose control.

2. Electrical safety

a. **Power tool plugs must match the outlet. Never modify the plug in any way.** Do not use any adapter plugs with earthed (grounded) power tools. Unmodified plugs and matching outlets will reduce risk of electric shock.

b. **Avoid body contact with earthed or grounded surfaces such as pipes, radiators, ranges and refrigerators.**
There is an increased risk of electric shock if your body is earthed or grounded.

c. **Do not expose power tools to rain or wet conditions.** Water entering a power tool will increase the risk of electric shock.

d. **Do not abuse the cord. Never use the cord for carrying, pulling or unplugging the power tool. Keep cord away from heat, oil, sharp edges or moving parts.** Damaged or entangled cords increase the risk of electric shock.

e. **When operating a power tool outdoors, use an extension cord suitable for outdoor use.** Use of a cord suitable for outdoor use reduces the risk of electric shock.

f. **If operating a power tool in a damp location is unavoidable, use a residual current device (RCD) protected supply.** Use of an RCD reduces the risk of electric shock.

3. Personal safety

a. **Stay alert, watch what you are doing and use common sense when operating a power tool. Do not use a power tool while you are tired or under the influence of drugs, alcohol or medication.** A moment of inatten tion while operating power tools may result in serious personal injury.

b. **Use personal protective equipment. Always wear eye protection.** Protective equipment such as dust mask, non-skid safety shoes, hard hat, or hearing protection used for appropriate conditions will reduce personal injuries.

c. **Prevent unintentional starting. Ensure the switch is in the off-position before connecting to power source and/or battery pack, picking up or carrying the tool.** Carrying power tools with your finger on the switch or energising power tools that have the switch on invites accidents.

d. **Remove any adjusting key or wrench before turning the power tool on.** A wrench or a key left attached to a rotating part of the power tool may result in personal injury.

e. **Do not overreach. Keep proper footing and balance at all times.** This enables better control of the power tool in unexpected situations.

f. **Dress properly. Do not wear loose clothing or jewellery. Keep your hair, clothing and gloves away from moving parts.** Loose clothes, jewellery or long hair can be caught in moving parts.

g. **If devices are provided for the connection of dust extraction and collection facilities, ensure these are connected and properly used.** Use of dust collection can reduce dust-related hazards.

4. Power tool use and care

a. **Do not force the power tool. Use the correct power tool for your application.** The correct power tool will do the job better and safer at the rate for which it was designed.

b. **Do not use the power tool if the switch does not turn it on and off.** Any power tool that cannot be controlled with the switch is dangerous and must be repaired.

c. **Disconnect the plug from the power source and/or the battery pack from the power tool before making any adjustments, changing accessories, or storing power tools.** Such preventive safety measures reduce the risk of starting the power tool accidentally.

d. **Store idle power tools out of the reach of children and do not allow persons unfamiliar with the power tool or these instructions to operate the power tool.** Power tools are dangerous in the hands of untrained users.

e. **Maintain power tools. Check for misalignment or binding of moving parts, breakage of parts and any other condition that may affect the power tools operation. If damaged, have the power tool repaired before use.** Many accidents are caused by poorly maintained power tools.

f. **Keep cutting tools sharp and clean.** Properly maintained cutting tools with sharp cutting edges are less likely to bind and are easier to control.

g. **Use the power tool, accessories and tool bits etc. in accordance with these instructions, taking into account the working conditions and the work to be performed.** Use of the power tool for operations different from those intended could result in a hazard ous situation.

5. Service

a. **Have your power tool serviced by a qualified repair person using only identical replacement parts.** This will ensure that the safety of the power tool is maintained.

Additional power tool safety warnings



Warning! Additional safety warnings for drills and impact drills.

- **Wear ear protectors with impact drills.** Exposure to noise can cause hearing loss.
- **Use auxiliary handles supplied with the tool.** Loss of control can cause personal injury.
- **Hold power tool by insulated gripping surfaces when performing an operation where the cutting accessory may contact hidden wiring.** Cutting accessory contacting a "live" wire may make exposed metal parts of the power tool "live" and could give the operator an electric shock.
- **Never use a chisel accessory in rotary mode.** The accessory will bind in the material and rotate the drill.

- **Use clamps or another practical way to secure and support the workpiece to a stable platform.** Holding the work by hand or against your body leaves it unstable and may lead to loss of control.
- **Before drilling into walls, floors or ceilings, check for the location of wiring and pipes.**
- **Avoid touching the tip of a drill bit just after drilling, as it may be hot.**
- **This tool is not intended for use by persons (including children) with reduced physical, sensory or mental capabilities, or lack of experience and knowledge, unless they have been given supervision or instruction concerning use of the appliance by a person responsible for their safety.** Children should be supervised to ensure that they do not play with the appliance.
- **The intended use is described in this instruction manual.**
  The use of any accessory or attachment or performance of any operation with this tool other than those recommended in this instruction manual may present a risk of personal injury and/or damage to property.
- **Use a face or dust mask whenever the operations may produce dust or flying particles.**

Safety of others

- This appliance is not intended for use by persons (including children) with reduced physical, sensory or mental capabilities, or lack of experience and knowledge, unless they have been given supervision or instruction concerning use of the appliance by a person responsible for their safety.
- Children should be supervised to ensure that they do not play with the appliance.

Residual risks.

Additional residual risks may arise when using the tool which may not be included in the enclosed safety warnings. These risks can arise from misuse, prolonged use etc.
Even with the application of the relevant safety regulations and the implementation of safety devices, certain residual

risks can not be avoided. These include:

- Injuries caused by touching any rotating/moving parts.
- Injuries caused when changing any parts, blades or accessories.
- Injuries caused by prolonged use of a tool. When using any tool for prolonged periods ensure you take regular breaks.
- Impairment of hearing.
- Health hazards caused by breathing dust developed when using your tool (example:- working with wood, especially oak, beech and MDF.)

Vibration

The declared vibration emission values stated in the technical data and the declaration of conformity have been measured in accordance with a standard test method provided by EN 60745 and may be used for comparing one tool with another. The declared vibration emission value may also be used in a preliminary assessment of exposure.
Warning! The vibration emission value during actual use of the power tool can differ from the declared value depending on the ways in which the tool is used. The vibration level may increase above the level stated.
When assessing vibration exposure to determine safety measures required by 2002/44/EC to protect persons regularly using power tools in employment, an estimation of vibration exposure should consider, the actual conditions of use and the way the tool is used, including taking account of all parts of the operating cycle such as the times when the tool is switched off and when it is running idle in addition to the trigger time.

Labels on tool

The following pictograms are shown on the tool along with the date code:



Warning! To reduce the risk of injury, the user must read the instruction manual.



Wear ear protectors with Impact drills. Exposure to noise can cause hearing loss

Electrical safety



This tool is double insulated; therefore no earth wire is required. Always check that the power supply corresponds to the voltage on the rating plate.

- If the supply cord is damaged, it must be replaced by the manufacturer or an authorised BLACK+DECKER Service Centre in order to avoid a hazard.

Features

1. Variable speed switch
2. Lock on button
3. Forward/reverse switch
4. Drilling mode selector
5. Chuck
6. Side handle

Assembly

Warning! Before assembly, make sure that the tool is switched off and unplugged.

Fitting the side handle and depth stop (not supplied) (fig. A, D)

- Turn the grip counter clockwise until you can slide the side handle (6) onto the front of the tool as shown.

- Rotate the side handle into the desired position.
- Insert the depth stop (not supplied) into the mounting hole.
- Set the drilling depth as described below.
- Tighten the side handle by turning the grip clockwise.

Fitting a drill bit (fig. B)

- Open the chuck by turning the front part with one hand while holding the rear part with the other.
- Insert the bit shaft into the chuck and firmly tighten the chuck.

Use

Warning! Let the tool work at its own pace. Do not overload.
Warning! Before drilling into walls, floors or ceilings, check for the location of wiring and pipes.

Selecting the direction of rotation (fig. C)

For drilling and for tightening screws, use forward (clockwise) rotation. For loosening screws or removing a jammed drill bit, use reverse (counter clockwise) rotation.

- To select forward rotation, push the forward/reverse switch (3) to the left position.
- To select reverse rotation, push the forward/reverse button to the right.

Warning! Never change the direction of rotation while the motor is running.

Selecting the drilling mode (fig. D)

- For Impact drilling in masonry and concrete, set the drilling mode selector (4) to the T position.
- For drilling in steel, wood and plastics or for screw driving set the operating mode selector (4) to the position.

Setting the drilling depth (fig. D)

- Slacken the side handle (6) by turning the grip counter clockwise.
- Set the depth stop (not supplied) to the desired position. The maximum drilling depth is equal to the distance between the tip of the drill bit and the front end of the depth stop.
- Tighten the side handle by turning the grip clockwise.

Switching on and off

- To switch the tool on, press the variable speed switch (1). The tool speed depends on how far you press the switch. As a general rule, use low speeds for large diameter drill bits and high speeds for smaller diameter drill bits.
- For continuous operation, press the lock-on button (2) and release the variable speed switch. This option is available only at full speed in both forward and reverse modes.
- To switch the tool off, release the variable speed switch.

To switch the tool off when in continuous operation, press the variable speed switch again and release it.

Accessories

The performance of your tool depends on the accessory used. BLACK+DECKER accessories are engineered to high quality standards and designed to enhance the performance of your tool. By using these accessories you will get the very best from your tool.

Maintenance

Your BLACK+DECKER corded/cordless appliance/tool has been designed to operate over a long period of time with a minimum of maintenance. Continuous satisfactory operation depends upon proper tool care and regular cleaning.
Warning! Before performing any maintenance on corded/cordless power tools:

- Switch off and unplug the appliance/tool.
- Or switch off and remove the battery from the appliance/tool if the appliance/tool has a separate battery pack.
- Or run the battery down completely if it is integral and then switch off.
- Unplug the charger before cleaning it. Your charger does not require any maintenance apart from regular cleaning.
- Regularly clean the ventilation slots in your appliance/tool/charger using a soft brush or dry cloth.
- Regularly clean the motor housing using a damp cloth. Do not use any abrasive or solvent-based cleaner.
- Regularly open the chuck and tap it to remove any dust from the interior (when fitted).

Mains plug replacement (U.K. & Ireland only)

If a new mains plug needs to be fitted:

- Safely dispose of the old plug.
- Connect the brown lead to the live terminal in the new plug.
- Connect the blue lead to the neutral terminal.

Warning! No connection is to be made to the earth terminal.
Follow the fitting instructions supplied with good quality plugs.
Recommended fuse: 5 A.

Protecting the environment

Separate collection. Products and batteries marked with this symbol must not be disposed of with normal household waste. Products and batteries contain materials that can be recovered or recycled reducing the demand for raw materials.



Please recycle electrical products and batteries according to local provisions.
Further information is available at www.2helpU.com

ENGLISH (Original instructions)

Technical data

		BEH200
Input voltage	V_{AC}	230
Power input	W	500
No load speed	min^{-1}	0 ~ 2900
Max. drilling capacity		
Concrete	mm	13
Steel	mm	13
Wood	mm	20
Weight	kg	1.69 with side handle

Level of sound pressure according to EN 60745:
Sound pressure (L_{pA}) 99 dB(A), uncertainty (K) 3 dB(A)
Sound power (L_{WA}) 110 dB(A), uncertainty (K) 3 dB(A)

Vibration total values (triax vector sum) according to EN 60745:
Impact drilling into concrete ($a_{h,ID}$) 17 m/s^2, uncertainty (K) 1,5 m/s^2 Drilling into metal ($a_{h,D}$) 7.6 m/s^2, uncertainty (K) 1,5 m/s^2

EC declaration of conformity

MACHINERY DIRECTIVE

CE

BEH200 Impact drill
Black & Decker declares that these products described under "technical data" are in compliance with:
EN60745-1:2009+A11:2010, EN60745-2-1:2010.
These products also comply with directive 2014/30/EU, 2006/42/EC and 2011/65/EU.

For more information, please contact Black & Decker at the following address or refer to the back of the manual.

The undersigned is responsible for compilation of the technical file and makes this declaration on behalf of Black & Decker..



R. Laverick
Director of Engineering
Black & Decker Europe, 210 Bath Road, Slough,
Berkshire, SL1 3YD
United Kingdom
14/12/2017

Guarantee

Black & Decker is confident of the quality of its products and offers consumers a 24 month guarantee from the date of purchase. This guarantee is in addition to and in no way prejudices your statutory rights. The guarantee is valid within the territories of the Member States of the European Union and the European Free Trade Area.

To claim on the guarantee, the claim must be in accordance with Black & Decker Terms and Conditions and you will need to submit proof of purchase to the seller or an authorised repair agent. Terms and conditions of the Black & Decker 2 year guarantee and the location of your nearest authorised repair agent can be obtained on the Internet at www.2helpU.com, or by contacting your local Black & Decker office at the address indicated in this manual.

Please visit our website www.blackanddecker.co.uk to register your new Black & Decker product and receive updates on new products and special offers.

Australia	Black & Decker (Australia) Pty. Ltd. 20 Fletcher Road, Mooroolbark, Victoria, 3138	Tel. Fax	03-8720 5100 03-9727 5940
New Zealand	Black & Decker 5 Te Apunga Place Mt Wellington Aukland 1060	Tel. Fax	+64 9 259 1133 +64 9 259 1122
United Kingdom & **Republic Of Ireland** www.blackanddecker.co.uk emeaservice@sbdinc.com	Black & Decker 210 Bath Road Slough, Berkshire SL1 3YD	Tel. Fax	01753 511234 01753 512365