EN

BLACK+DECKER™

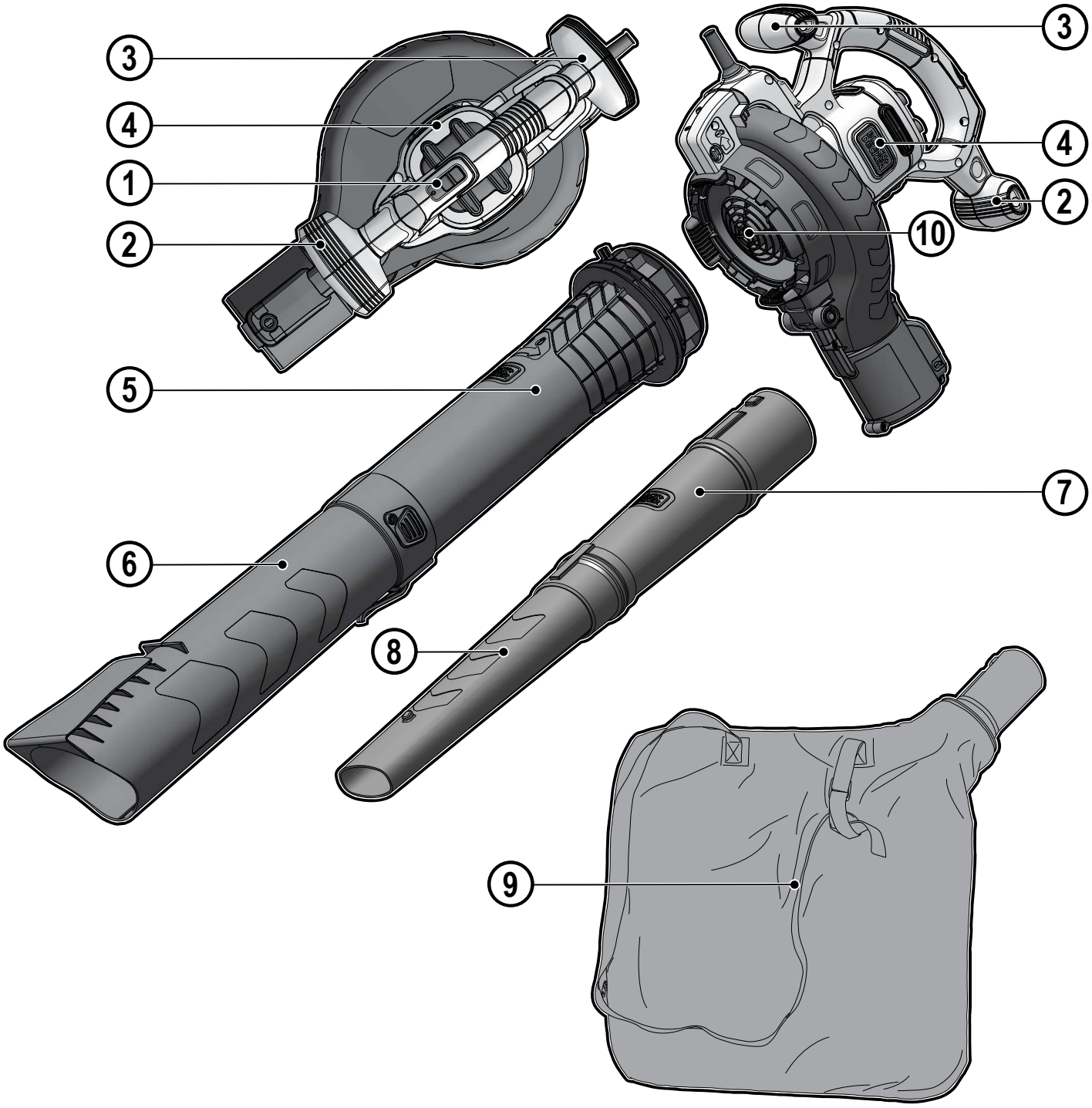

www.blackanddecker.co.uk

BEBLV260

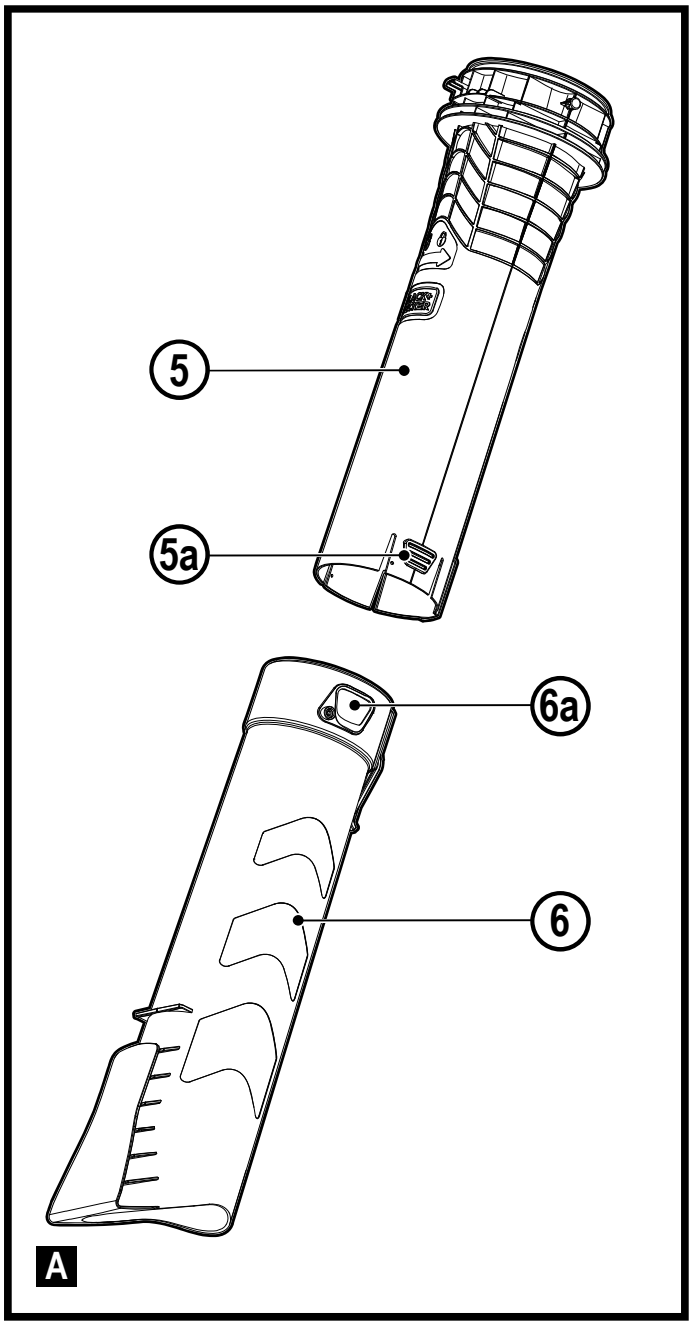
5
5a
6a
6
A

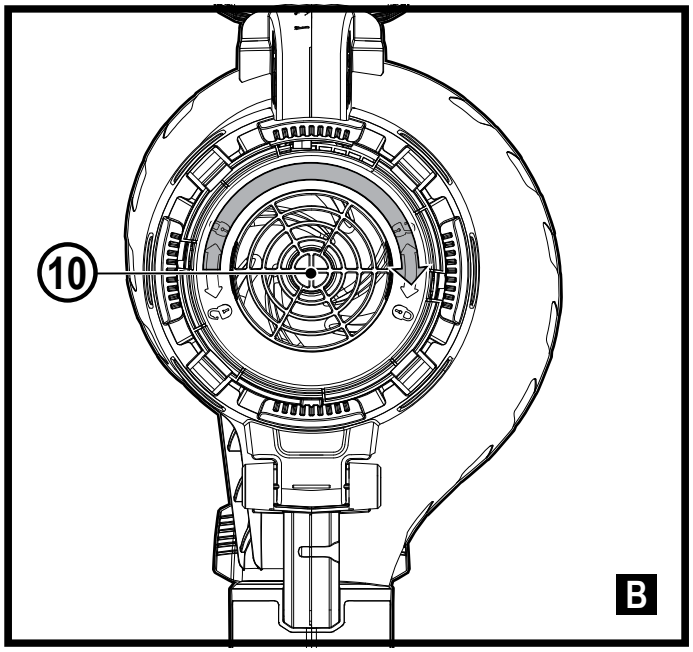
10
B

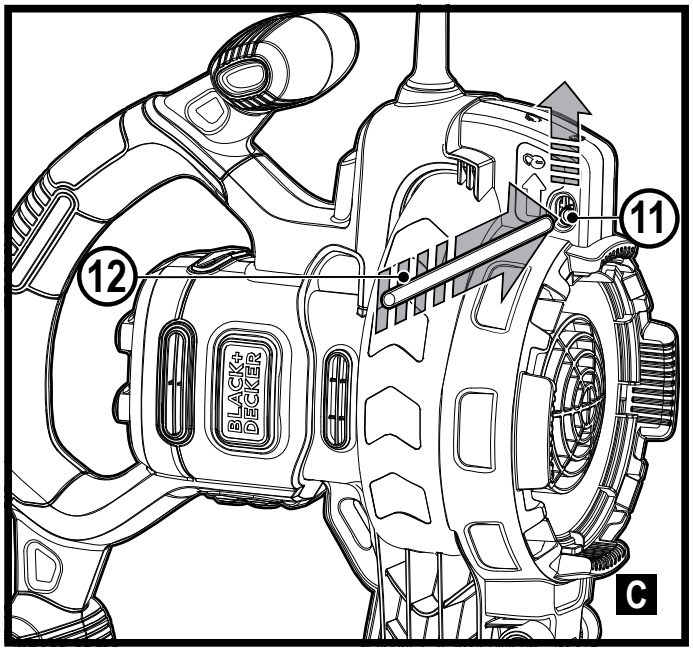
11
12
BLACK+DECKER
C

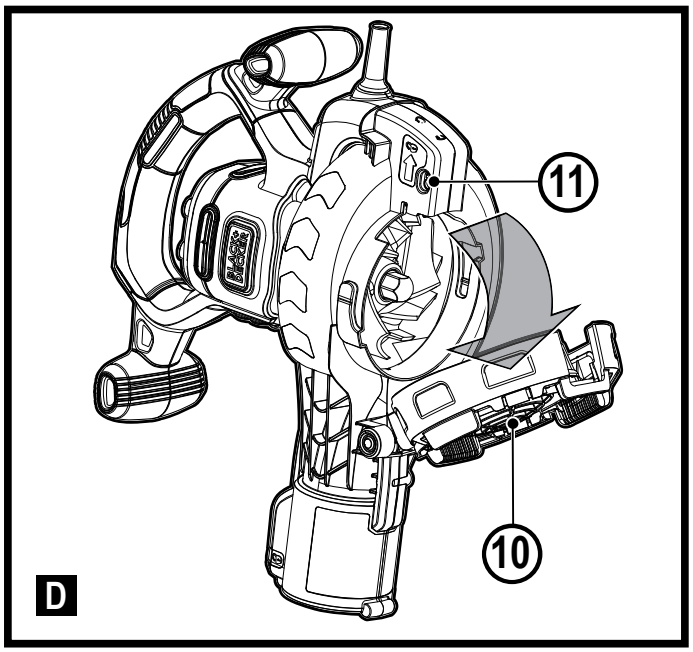
11
10
D

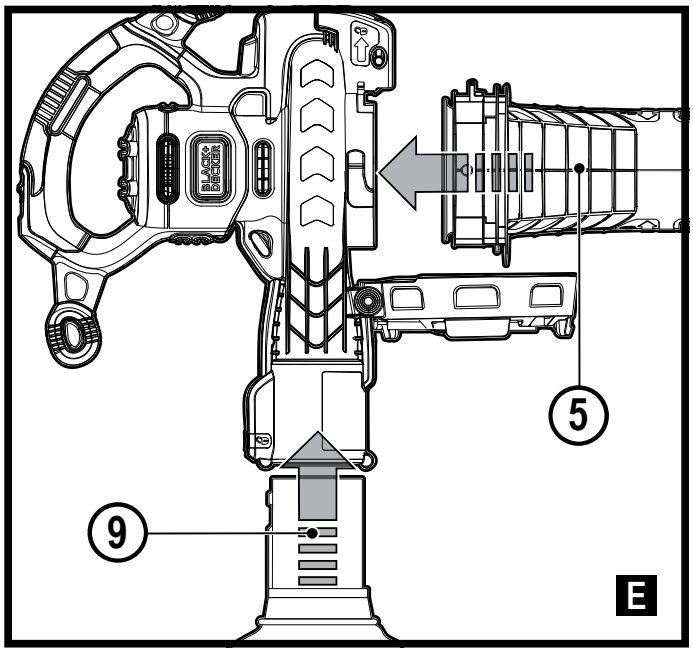
5
9
E

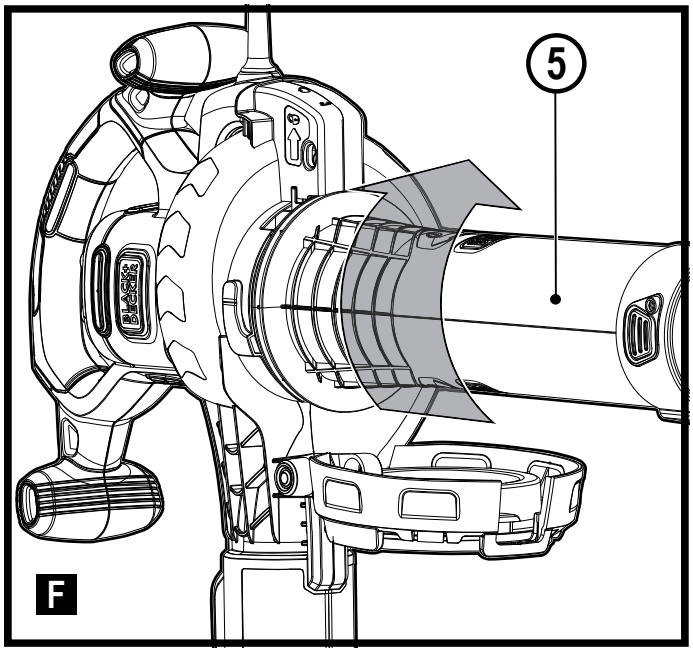
5
F


1
G

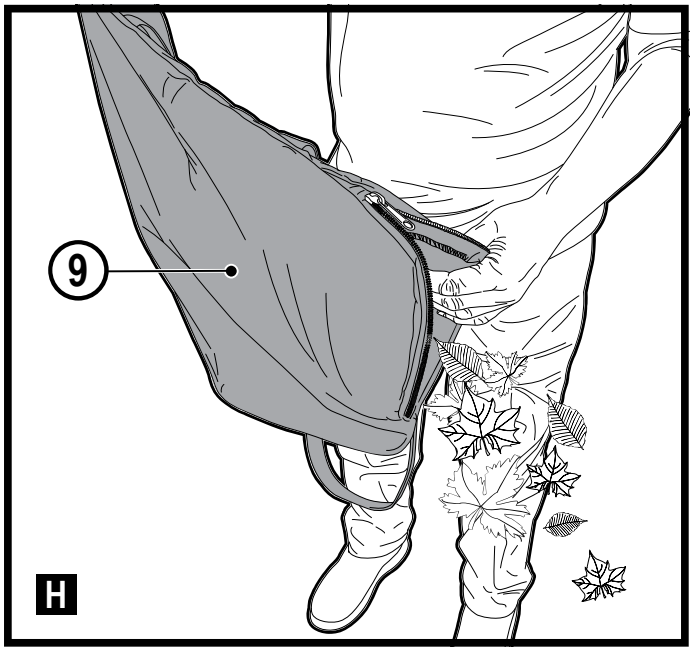
9
H

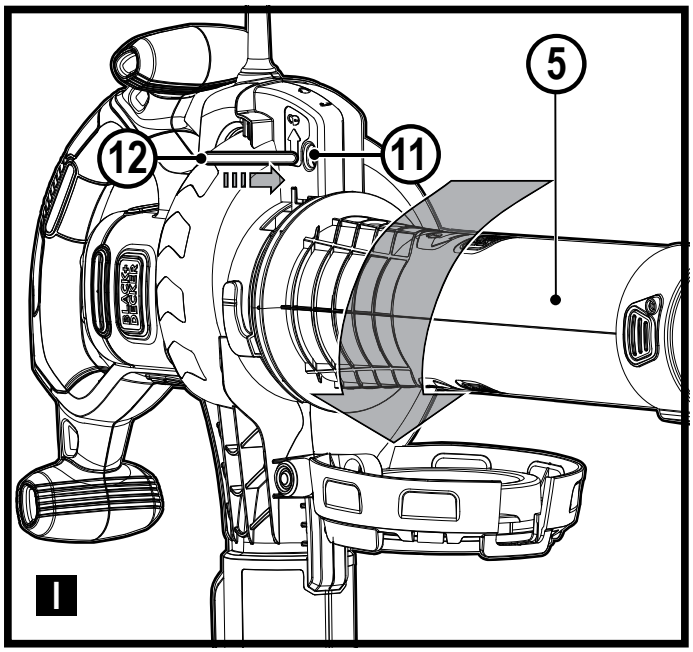
5
12
11
I

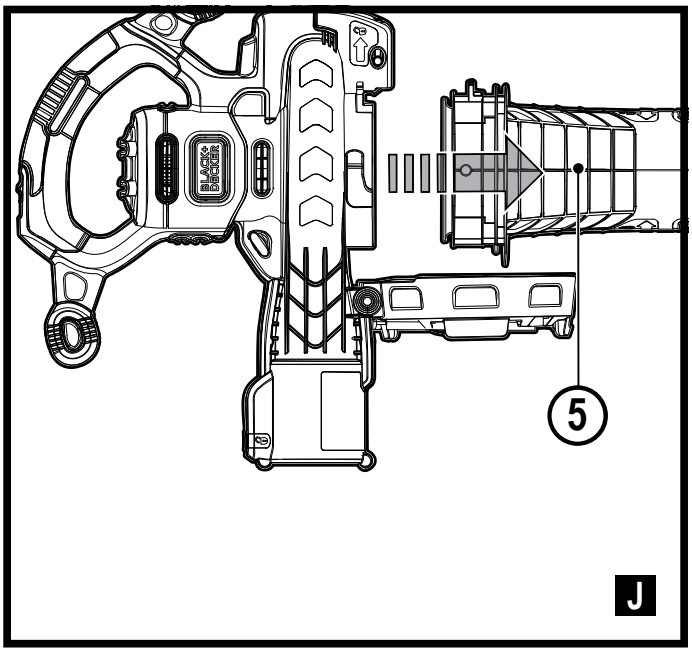
5
J

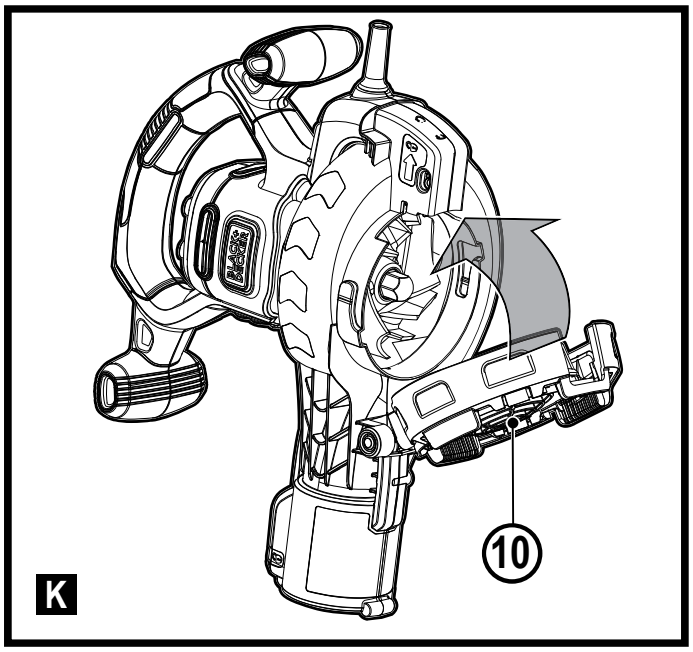
10
K

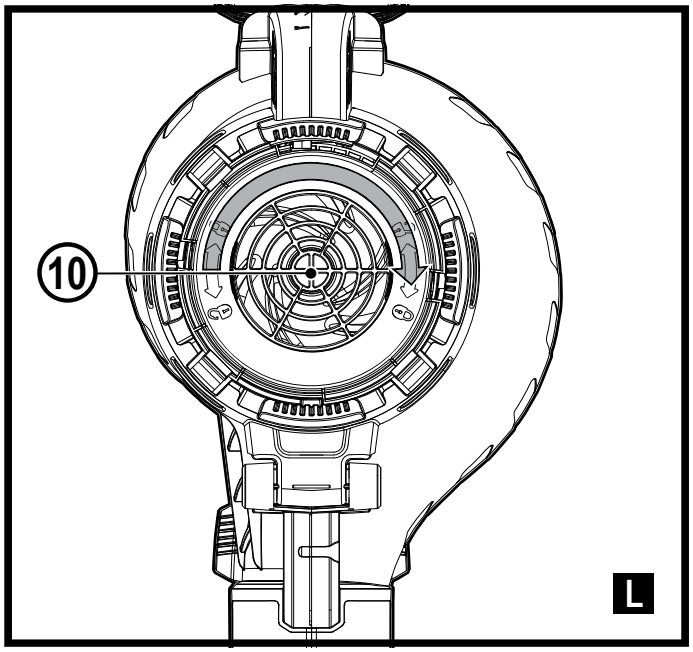
10
L

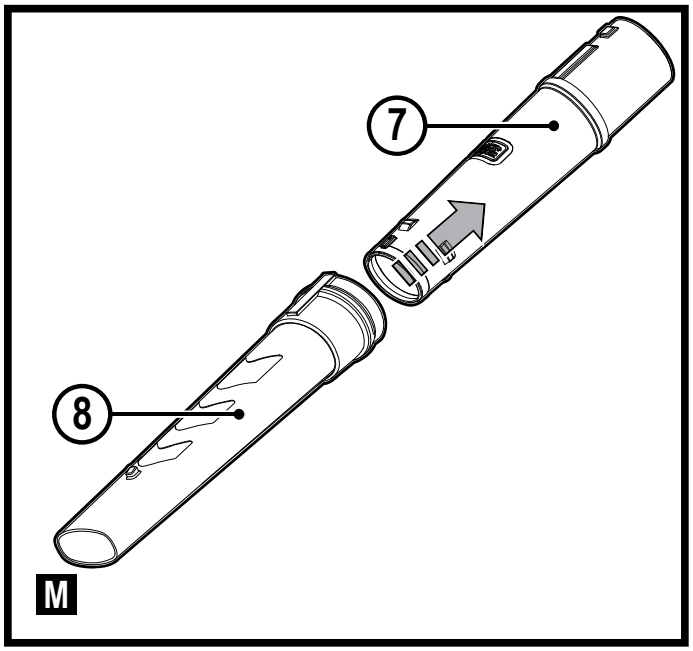
7
8
M

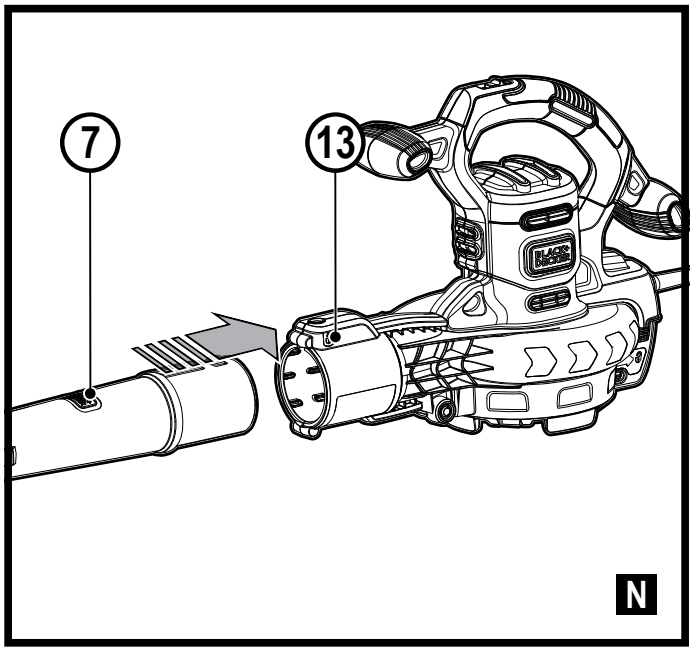
7
13
N

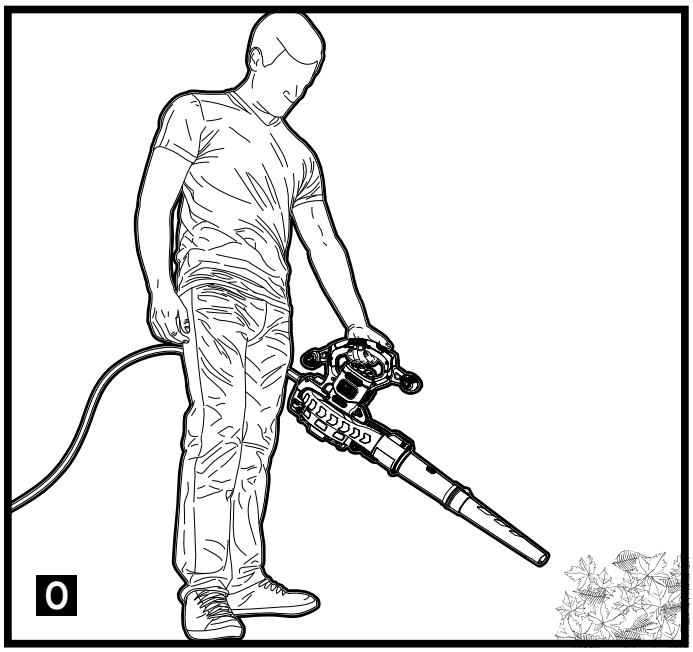
O

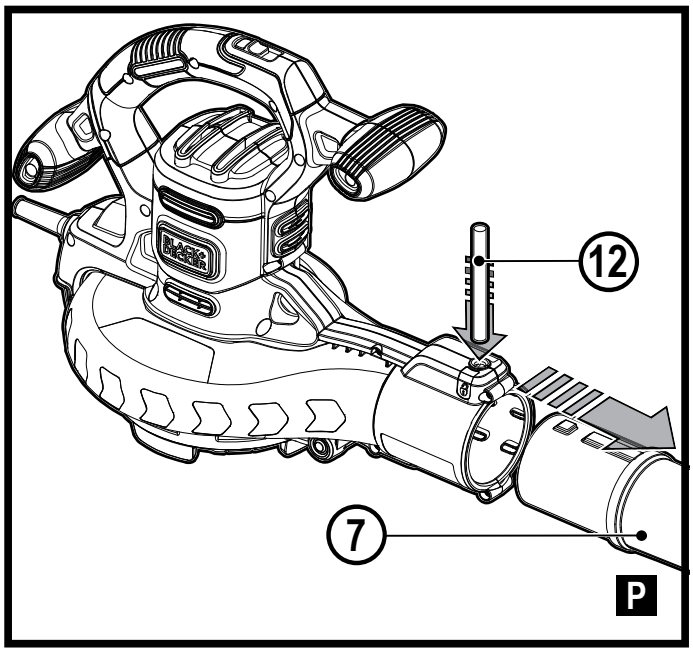
12
7
P

Intended use
Your BLACK+DECKER™ BEBLV260 blower vac has been designed for leaf clearing. This appliance is intended for consumer and outdoor use only.

General appliance safety warnings

Warning! When using mains powered/cordless appliances, basic safety precautions, including the following, should always be followed to reduce the risk of fire, electric shock, personal injury and material damage.

- Read all of this manual carefully before using the appliance, be familiar with the controls and the proper use of the appliance.
- The intended use is described in this manual. The use of any accessory or attachment or the performance of any operation with this appliance other than those recommended in this instruction manual may present a risk of personal injury.

The term "appliance" in all of the warnings listed below refers to your mains operated (corded) appliance or battery operated (cordless) appliance.
Save all warnings and instructions for future reference.
Save all warnings and instructions for future reference.

Using your appliance

- **Always take care when using the appliance.**
- Keep work area clean and well lit. Cluttered or dark areas invite accidents.
- Only use the appliance in daylight or good artificial light.
- Do not operate your appliance in explosive atmospheres, such as in the presence of flammable liquids, gases or dust.
- Never allow children or people unfamiliar with the instructions to use the appliance, local regulations may restrict the age of the operator.
- Do not allow children or animals to come near the work area or touch the appliance supply cord.
- Keep children, bystanders and animals away while operating an appliance. Distractions can cause you to lose control.
- The appliance is not to be used as a toy.
- Do not immerse the appliance in water.
- Do not open body casing. There are no user serviceable parts inside.

Personal safety

- Stay alert, watch what you are doing and use common sense when operating an appliance. Do not use an appliance while you are tired or under the influence of drugs, alcohol or medication. A moment of inattention while operating an appliance may result in serious personal injury.
- Where required, use personal protective equipment.

Protective equipment such as eye protection, dust mask, non-skid safety shoes, hard hat, or hearing protection used for appropriate conditions will reduce personal injuries.

- Prevent unintentional starting. Make sure that the switch is in the off position before connecting to a power source and/or battery pack, picking up or carrying the appliance.
  Carrying appliances with your finger on the switch or energising appliances that have the switch on invites accidents.
- Do not overreach. Keep proper footing and balance at all times. This enables better control of the appliance in unexpected situations.
- Dress properly. Do not wear loose clothing or jewellery. Keep your hair, clothing and gloves away from moving parts. Loose clothes, jewellery or long hair can be caught in moving parts.

Appliance use and care

- Before use, check the appliance for damaged or defective parts.
  Check for breakage of parts, damage to switches and any other conditions that may affect its operation.
- Do not use the appliance if the switch does not turn it on and off. Any appliance that cannot be controlled with the switch is dangerous and must be repaired.
- Disconnect the plug from the power source and/or the battery pack from the appliance before making any adjustments, changing accessories, or storing appliances. Such preventive safety measures reduce the risk of starting the appliance accidentally.
- Where applicable, keep cutting tools sharp and clean. Properly maintained cutting tools with sharp cutting edges are less likely to bind and are easier to control.
- Do not use the appliance if any part is damaged or defective.
- Have any damaged or defective parts repaired or replaced by an authorised repair agent.
- Never attempt to remove or replace any parts other than those specified in this manual.

Electrical safety

- Appliance plugs must match the outlet. Never modify the plug in any way. Do not use any adapter plugs with earthed (grounded) appliance. Unmodified plugs and matching outlets will reduce risk of electric shock.
- Do not expose appliance to rain or wet conditions. Water entering a appliance will increase the risk of electric shock.
- Do not abuse the cord. Never use the cord for carrying, pulling or unplugging the appliance. Keep cord away from heat, oil, sharp edges or moving parts. Damaged or entangled cords increase the risk of electric shock.

- When operating an appliance outdoors, use an extension cord suitable for outdoor use. Use of a cord suitable for outdoor use reduces the risk of electric shock.
- If operating an appliance in a damp location is unavoidable, use a Residual Current Device (RCD) protected supply. Use of an RCD reduces the risk of electric shock.

After Use

- When not in use, the appliance should be stored in a dry, well ventilated place out of the reach of children.
- Children should not have access to stored appliances.
- When the appliance is stored or transported in a vehicle it should be placed in the boot or restrained to prevent movement following sudden changes in speed or direction.

Service

- Have your appliance serviced by a qualified repair person using only identical replacement parts. This will ensure that the safety of the appliance is maintained.

Additional Safety instructions for blow vacs

The intended use is described in this manual. The use of any accessory or attachment or performance of any operation with this appliance other than those recommended in this instruction manual can present a risk of personal injury and/or damage to property.

- To protect your feet and legs while operating the appliance, always wear heavy duty footwear and long trousers.
- Do not use in vacuum mode without the vacuum tubes and collection bag in place.
- Always switch off your product, allow the fan to stop and remove the plug from the socket when:
  - Changing from blower to vacuum.
  - The supply cable has become damaged or entangled.
  - You leave your product unattended.
  - Clearing a blockage.
  - Checking, adjusting, cleaning or working on your product.
  - If the appliance starts to vibrate abnormally.
- Do not place the inlet or outlet of the vacuum near eyes or ears when operating.
- Never blow debris in the direction of bystanders.
- Do not use in the rain or leave outdoors while it is raining.
- Do not cross gravel paths or roads whilst your product is switched on during blow/vac mode.
- Walk, never run.
- Do not place your unit down on gravel while it is switched on.
- Always be sure of your footing, particularly on slopes.
- Do not overreach and keep your balance at all times.

- Do not pick up matter that may be contaminated with flammable or combustible liquids such as gasoline, or use in areas where they might be present.
- Do not place any objects into the openings. Never use if the openings are blocked - keep free of hair, lint, dust and anything that may reduce the airflow.

Warning! Always use your product in the manner outlined in this manual.
Your product is designed to be used in an upright mode and if it is used in any other way it may result in injury. Never run your product whilst lying on it's side or upside down.

- The operator or user is responsible for accidents or hazards occurring to other people or their property.
- Do not carry the appliance by the cable.
- Always direct the cable to the rear away from the appliance.

Warning! If a cord becomes damaged during use, disconnect the supply cord from the mains supply immediately. Do not touch the supply cord before disconnecting the supply.

- Do not use solvents or cleaning fluids to clean your product. Use a blunt scraper to remove grass and dirt.
- Check the collection bag frequently for wear or deterioration.
- Replacement fans are available from a BLACK+DECKER service agent. Use on BLACK+DECKER recommended spare parts and accessories.
- Keep all nuts bolts and screws tight to make sure that the appliance is in a safe working condition.

Safety of others

- This appliance can be used by children aged from 8 years and above and persons with reduced physical, sensory or mental capabilities or lack of experience and knowledge if they have been given supervision or instruction concerning use of the appliance in a safe way and understand the hazards involved. Children shall not play with the appliance.
  Cleaning and user maintenance shall not be made by children without supervision.
- Children should be supervised to ensure that they do not play with the appliance.

Electrical safety



This appliance is double insulated; therefore no earth wire is required. Always check that the power supply corresponds to the voltage on the rating plate.

- If the supply cord is damaged, it must be replaced by the manufacturer or an authorised BLACK+DECKER Service Centre in order to avoid a hazard.
- Electric safety can be further improved by using a highsensitivity 30 mA Residual Current Device (RCD).

Using an extension cable

Always use an approved extension cable suitable for the power input of this tool (see technical data). The extension cable must be suitable for outdoor use and marked accordingly. Up to 30 m of 1.5 mm² HO5V V-F extension cable can be used without loss of product performance. Before use, inspect the extension cable for signs of damage, wear and ageing. Replace the extension cable if damaged or defective. When using a cable reel, always unwind the cable completely.

Residual risks

Additional residual risks may arise when using the tool which may not be included in the enclosed safety warnings.
These risks can arise from misuse, prolonged use etc. Even with the application of the relevant safety regulations and the implementation of safety devices, certain residual risks can not be avoided. These include:

- Injuries caused by touching any rotating/ moving parts.
- Injuries caused when changing any parts, blades or accessories.
- Injuries caused by prolonged use of a tool. When using any tool for prolonged periods ensure you take regular breaks.
- Impairment of hearing.
- Health hazards caused by breathing dust developed when using your tool (example:- working with wood, especially oak, beech and MDF.).

Vibration

The declared vibration emission values stated in the technical data and the declaration of conformity have been measured in accordance with a standard test method provided by EN50636 and may be used for comparing one tool with another. The declared vibration emission value may also be used in a preliminary assessment of exposure.
Warning! The vibration emission value during actual use of the power tool can differ from the declared value depending on the ways in which the tool is used. The vibration level may increase above the level stated.
When assessing vibration exposure to determine safety measures required by 2002/44/EC to protect persons regularly using power tools in employment, an estimation of vibration exposure should consider, the actual conditions of use and the way the tool is used, including taking account of all parts of the operating cycle such as the times when the tool is switched off and when it is running idle in addition to the trigger time.

Labels on Appliance

The following pictograms, along with the date code, are shown on the tool.


Warning! Read the manual prior to operation.


Wear safety glasses or goggles when operating this appliance.


Wear suitable ear protection when operating this appliance.


Do not expose the tool to rain or high humidity or leave outdoors while it is raining.


Switch off: remove plug from mains before cleaning or maintenance.


Disconnect the mains plug if the cord becomes damaged or entangled.


Beware of flying objects.


Keep bystanders away.



Directive 2000/14/EC guaranteed sound power.

Features

This appliance includes some or all of the following features.

1. On/Off switch - speed control
2. Front handle
3. Back handle
4. Power head
5. Upper vacuum tube
6. Lower vacuum tube
7. Upper blower tube
8. Lower blower tube
9. Collection bag
10. Fan guard

Using your product

Warning! When using as a blower or vacuum, always wear safety glasses. If using in dusty conditions, wear a filter mask as well.

Warning! Switch off your product, allow the fan to stop and remove the plug from the socket before carrying out any adjustment, servicing or maintenance.

Assembly


Warning! Before assembly, make sure that the appliance is switched off and unplugged.


Warning! Always wear protective gloves when working with your blow vac.

Vacuum tube assembly (fig. A)

The vacuum tubes must be assembled together before use.

Warning! Do not operate the appliance with the vacuum tubes separated.

- To ease assembly, apply a soapy water solution to the joint area.
- Align the notches (5a) and the recesses (6a) on the upper (5) and lower (6) vacuum tubes.
- Push the lower vacuum tube (6) firmly onto the upper vacuum tube (5) until they click into place.

Warning! Do not separate the tubes once assembled.

Vacuum mode (fig. B, C, D, E, F, G, H, I, J, K, L, M)

- Rotate the fan guard assembly anti-clockwise as shown in figure B.
- Insert the rod (12) (supplied) into the fan guard release (11) and push upward to release the fan guard assembly (10) as shown in figure C.
- Drop the fan guard assembly (10) forward as shown in figure D.
- Insert the assembled vacuum tube (5) into the available recess in the power head (4) as shown in figure E.
- Insert the collection bag (9) onto the power head (4) as shown in figure E.
- Rotate the assembled vacuum tube clockwise so that the bayonet fixing locks into place as shown in figure F.
- Place the straps from the collection bag over your shoulder (fig. G) this will support the additional weight as the back pack collection bag fills.
- Position the vacuum tube slightly above the debris/leaves. Switch on the appliance by pushing the On/Off switch (1) upwards (fig.G insert) and use a sweeping motion; the debris/leaves will be sucked up the tube, and thrown into the collection bag (9) (fig. G).
- To empty the collection bag (9) unzip the rear end and proceed to empty its contents as shown in figure H.
- When task is complete, rotate the assembled vacuum tube anticlockwise to release the bayonet fixing. Insert the rod (12) into the fan guard release (11) and push upwards to release the assembled vacuum tube. Remove the assembled vacuum tube from the powerhead as shown in figure J.
- Replace the fan guard assembly as shown in figure K.
- Rotate the fan guard assembly clockwise as shown in figure L.

Blower mode (fig. M, N, O, P)

- Assemble upper blow tube (7) with lower blow tube (8) as shown in figure M.
- Push the assembled blow tube onto the vacuum outlet (13) until the lock engages tightly with the blow tube (fig.N).

Warning! Never operate in Blow mode without the blow tube firmly in place.

- Hold the blow tube approximately 180 mm above the ground, switch on the appliance and using a sweeping motion from side to side, advance slowly keeping the accumulated debris/leaves in front of you (fig.O).
- Once you have blown the debris/leaves into a pile, you can remove the blow tube assembly by inserting the rod (12) into the aperture on the vacuum head (13) and pushing down to release the lock as shown in figure P.
- Now you can convert to vacuum mode and collect the debris.

Troubleshooting

Problem	Possible solution
Failure to operate	Check the connection to the power supply
	Check the fuse in the plug, if blown, replace (UK only).
	Check that the blow/vacuum tube assembly is correctly fitted to the powerhead.
	If the fuse continues to blow - immediately disconnect from the mains power supply and consult your local BLACK+DECKER authorised repair agent.
Poor vacuum/high pitched whine	Switch off - disconnect from the mains power supply, debris should fall clear of the tube.
	Remove and empty the collection bag.
	Check that both the inlet and exit ports on the vacuum tube are clear.
	Remove any debris from the fan area.
	If poor vacuuming continues - immediately disconnect from the mains power supply and consult your local BLACK+DECKER authorised repair agent

Maintenance

Your BLACK+DECKER appliance has been designed to operate over a long period of time with a minimum of maintenance.

Continuous satisfactory operation depends upon proper appliance care and regular cleaning.

- Keep the appliance clean and dry.
- Remove any leaves stuck to the inside of the vacuum tube.
- Regularly clean the ventilation slots with a clean, dry paint brush.
- Regularly clean the collection bag and ensure that it is clean and empty after each use.
- To clean the appliance, use only mild soap and a damp cloth. Never let any liquid get inside the tool and never immerse any part of the tool into liquid. Do not use any abrasive or solvent-based cleaner.
- Self lubricating bearings are used in your product, therefore lubrication is not required.

Mains plug replacement (U.K. & Ireland only)

If a new mains plug needs to be fitted:

- Safely dispose of the old plug.
- Connect the brown lead to the live terminal in the new plug.
- Connect the blue lead to the neutral terminal.

Warning! No connection is to be made to the earth terminal. Follow the fitting instructions supplied with good quality plugs. Recommended fuse: 13 A.

Protecting the environment



Separate collection. Products and batteries marked with this symbol must not be disposed of with normal household waste.

Products and batteries contain materials that can be recovered or recycled reducing the demand for raw materials. Please recycle electrical products and batteries according to local provisions. Further information is available at www.2helpU.com

Technical data

		BEBLV260
Input voltage	V_{AC}	230
Power Input	W	2600
Capacity	L	40
Weight (blower)	kg	3.6
Weight (vaccum)	kg	4.4

Level of sound pressure according to EN 50636-2-100
Sound pressure level at the operator position: (L_{pA}) 90.0 dB(A), uncertainty (K) 1.2 dB(A)
Sound power level (L_{WA}) 102.5 dB(A), uncertainty (K) 1.1 dB(A)

Vibration total values (triax vector sum) according to EN 50636-2-100
Vibration (a_h) 2.5 m/s^2, uncertainty (K) 1.5 m/s^2

EC DECLARATION OF CONFORMITY

MACHINERY DIRECTIVE

CE

BEBLV260 Blower Vac

Black & Decker declares that these products described under "technical data" are in compliance with:

2006/42/EC, EN60335-1:2012 + A11:2014 + A13:2017 + A1:2019 + A14:2019 + A2:2019, EN 50636-2-100:2014

2000/14/EC, Annex V

L_{WA} (measured sound pressure level) 102.5 dB(A),

Uncertainty (K)=1.1 dB(A),

L_{WA} (guaranteed sound power) 104 dB(A).

These products also comply with Directive 2014/30/EU and 2011/65/EU.

For more information, please contact Black & Decker at the following address or refer to the back of the manual.

The undersigned is responsible for compilation of the technical file and makes this declaration on behalf of Black & Decker.



Patrick Diepenbach
General Manager, Benelux
Black and Decker,
Egide Walschaertsstraat 14-18
2800 Mechelen, Belgium
15/3/2021

For more information, please contact Black & Decker at the following address or refer to the back of the manual.

The undersigned is responsible for compilation of the technical file and makes this declaration on behalf of Black & Decker.

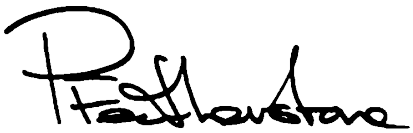

Paul Featherstone
Product Director – Outdoor Products Group
Black and Decker UK, 270 Bath Road, Slough
Berkshire, SL1 4DX
United Kingdom
15/3/2021

DECLARATION OF CONFORMITY

THE SUPPLY OF MACHINERY (SAFETY) REGULATIONS 2008

UK CA

BEBLV260 Blower Vac

Black & Decker declares that these products described under "technical data" are in compliance with:

The Supply of Machinery (Safety) Regulations, 2008, S.I. 2008/1597 (as amended),

EN60335-1:2012 + A11:2014 + A13:2017 + A1:2019 + A14:2019 + A2:2019.EN 50636-2-100:2014

The Noise Emission in the Environment by Equipment for use Outdoors Regulations 2001, S.I. 2001/1701 (as amended), Schedule 8.

L_{WA} (measured sound pressure level) 102.5 dB(A),

Uncertainty (K)=1.1 dB(A),

L_{WA} (guaranteed sound power) 104 dB(A).

These products conform to the following UK Regulations:

Electromagnetic Compatibility Regulations, 2016, S.I.2016/1091 (as amended).

The Restriction of the Use of Certain Hazardous Substances in Electrical and Electronic Equipment Regulations 2012, S.I. 2012/3032 (as amended).

Guarantee

Black & Decker is confident of the quality of its products and offers consumers a 24 month guarantee from the date of purchase. This guarantee is in addition to and in no way prejudices your statutory rights. The guarantee is valid within the territories of the Member States of the European Union and the European Free Trade Area.

To claim on the guarantee, the claim must be in accordance with Black&Decker Terms and Conditions and you will need to submit proof of purchase to the seller or an authorised repair agent.

Terms and conditions of the Black&Decker 2 year guarantee and the location of your nearest authorised repair agent can be obtained on the Internet at www.2helpU.com, or by contacting your local Black & Decker office at the address indicated in this manual.

Please visit our website www.blackanddecker.co.uk to register your new Black & Decker product and receive updates on new products and special offers.

Australia & New Zealand www.blackanddecker.com.au www.blackanddecker.co.nz	Stanley Black & Decker 810 Whitehorse Road Box Hill VIC 3128, Australia	Tel. Tel.	1800 338 002 (Aus) 0800 339 258 (NZ)
United Kingdom & Republic Of Ireland www.blackanddecker.co.uk emeaservice@sbdinc.com	Black & Decker 270 Bath Road Slough, Berkshire SL1 4DX	Tel. Fax	01753 511234 01753 512365