BLACK+DECKER™

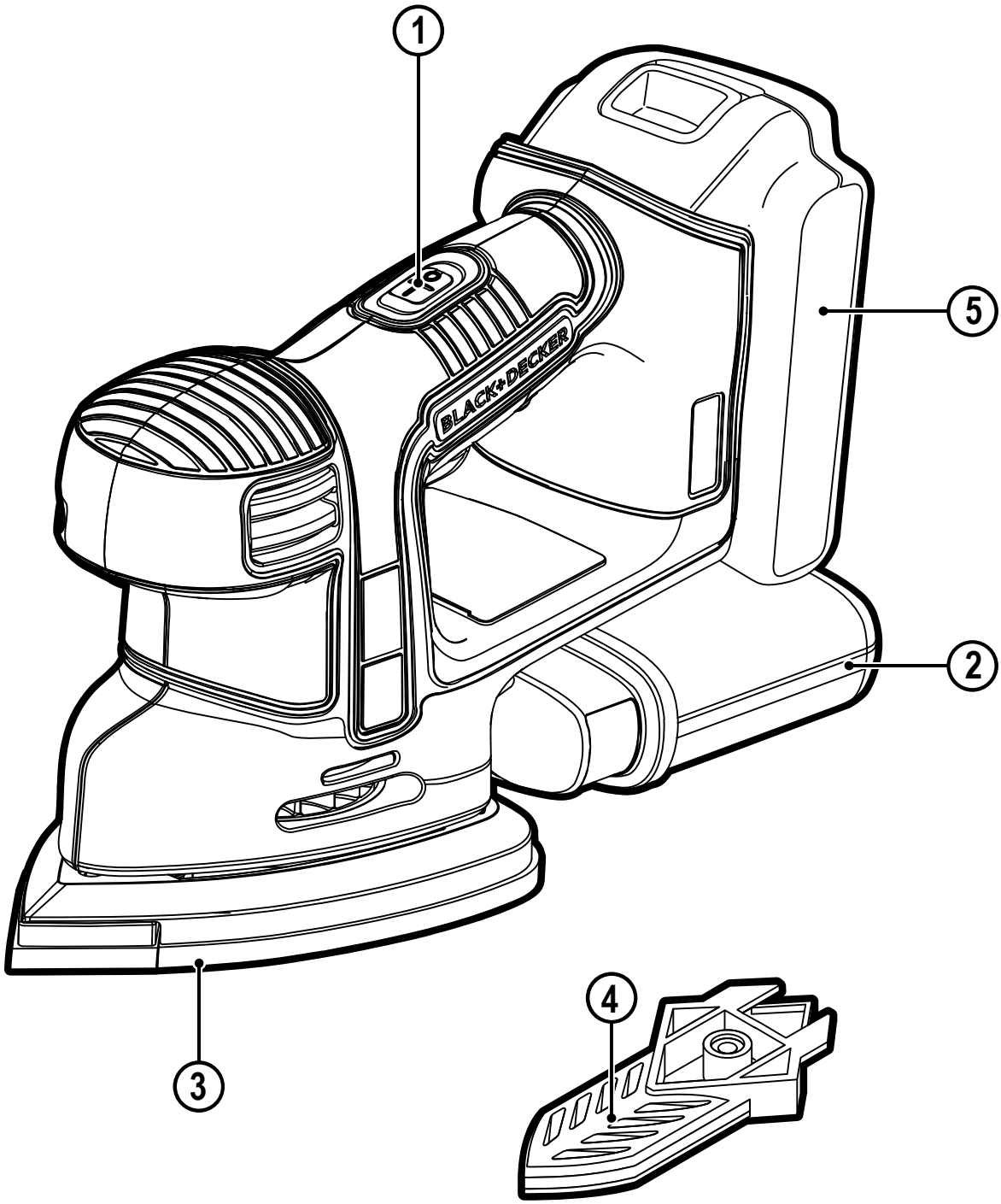

www.blackanddecker.eu

BDCDS18

EN DE FR IT NL ES PT SV NO DK FI EL

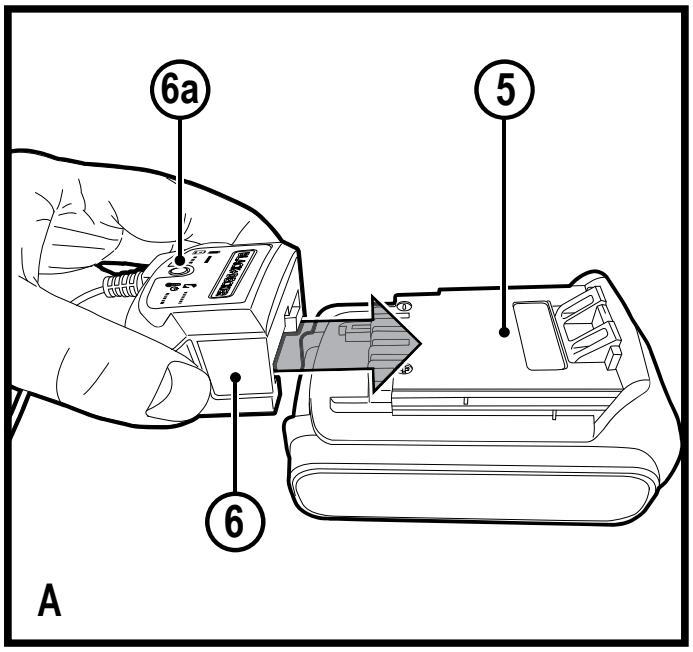
6a
5
6
A

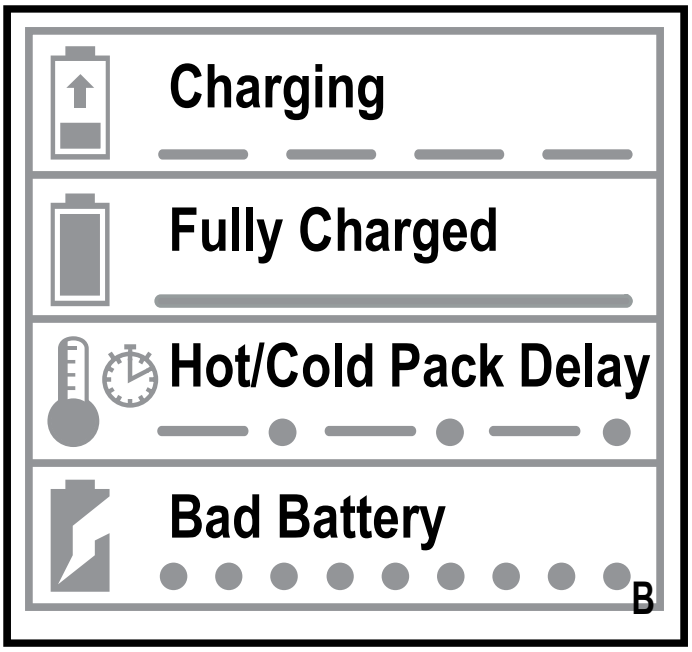
Charging
Fully Charged
Hot/Cold Pack Delay
Bad Battery
B

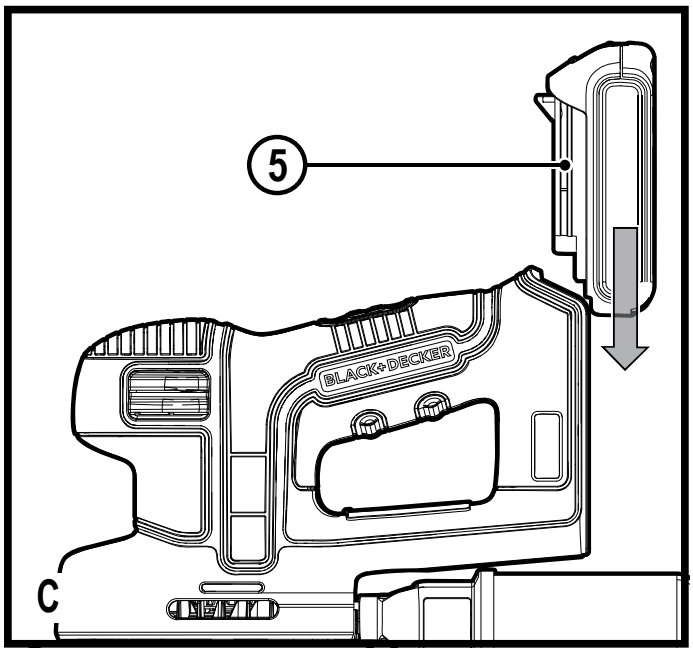
5
BLACK+DECKER
C

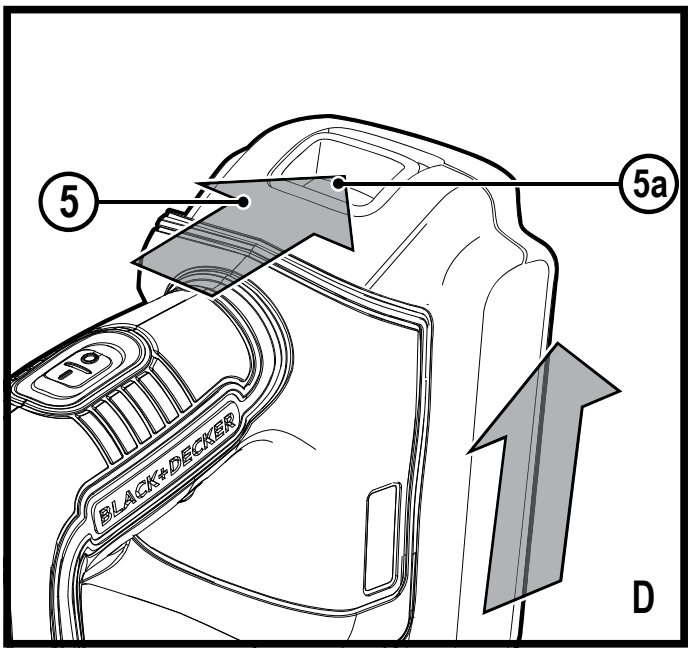
5
5a
BLACK+DECKER
D

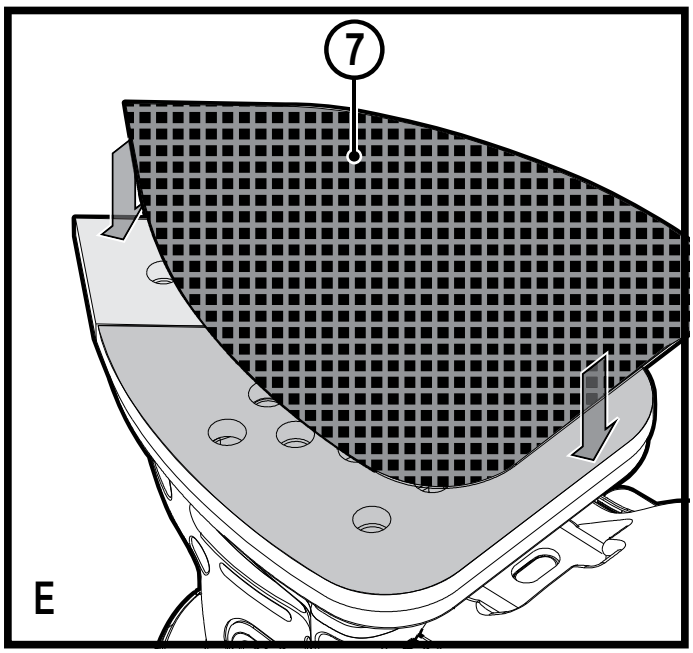
7
E

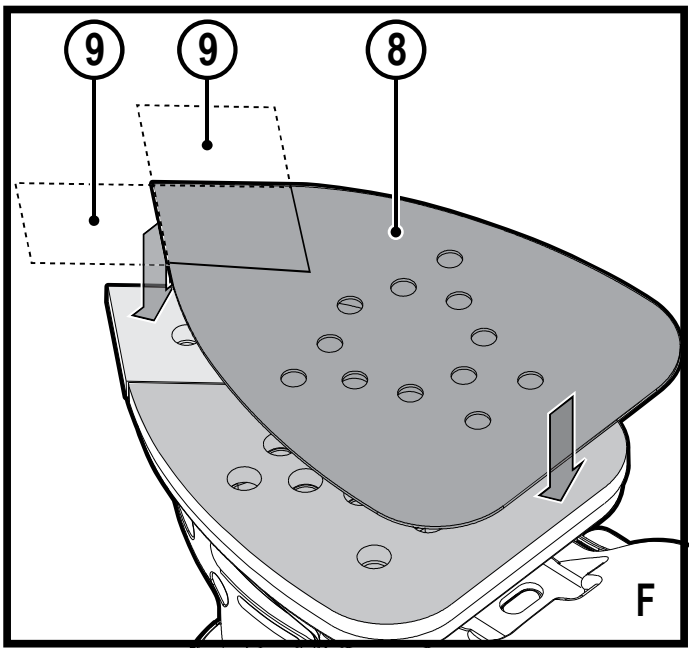
9
9
8
F

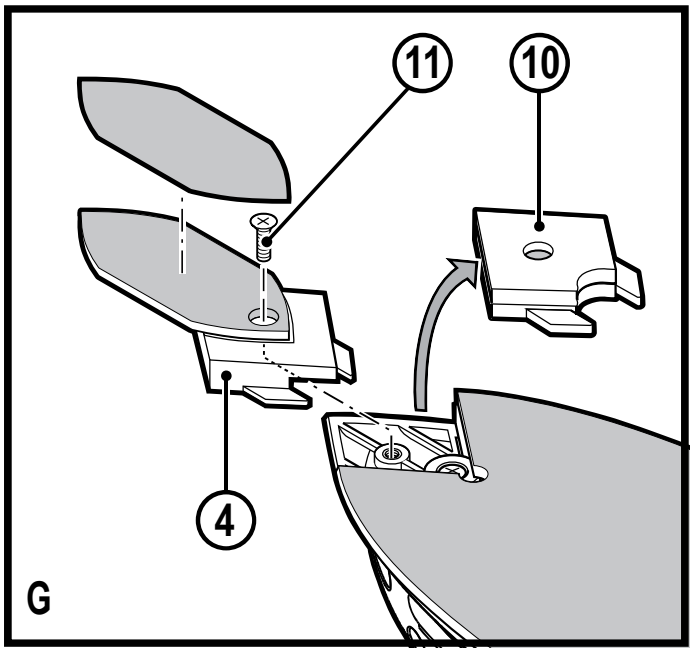

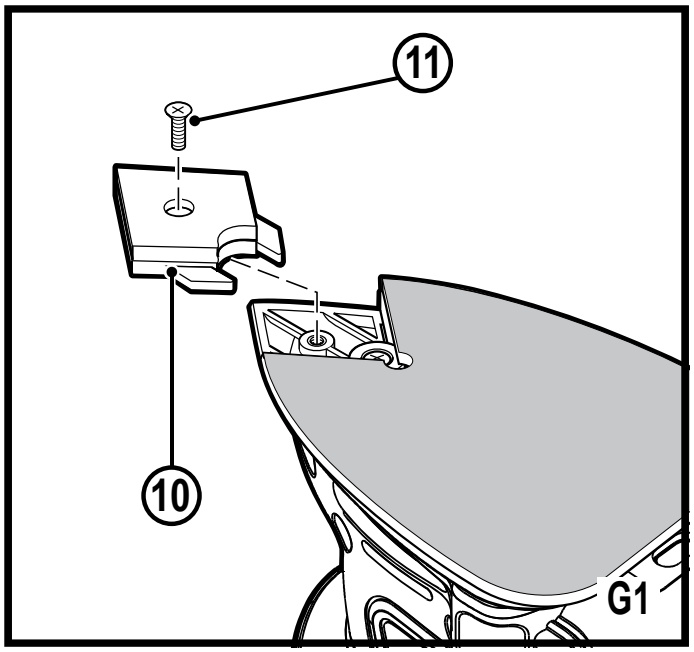

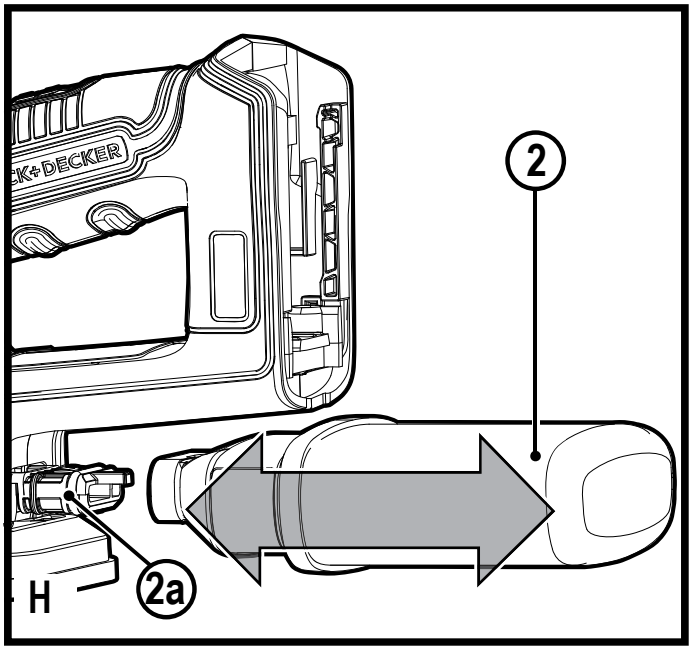

Intended use

Your BLACK+DECKER BDCDS18 sander has been designed for sanding wood, metal, plastics and painted surfaces. This tool is intended for consumer use only.

Safety instructions

General power tool safety warnings

Warning! Read all safety warnings and all instructions. Failure to follow the warnings and instructions listed below may result in electric shock, fire and/or serious injury.

Save all warnings and instructions for future reference.
The term "power tool" in all of the warnings listed below refers to your mains operated (corded) power tool or battery operated (cordless) power tool.

1. **Work area safety**

a. **Keep work area clean and well lit.** Cluttered or dark areas invite accidents.

b. **Do not operate power tools in explosive atmospheres, such as in the presence of flammable liquids, gases or dust.** Power tools create sparks which may ignite the dust or fumes.

c. **Keep children and bystanders away while operating a power tool.** Distractions can cause you to lose control.

2. **Electrical safety**

a. **Power tool plugs must match the outlet. Never modify the plug in any way. Do not use any adapter plugs with earthed (grounded) power tools.** Unmodified plugs and matching outlets will reduce risk of electric shock.

b. **Avoid body contact with earthed or grounded surfaces such as pipes, radiators, ranges and refrigerators.** There is an increased risk of electric shock if your body is earthed or grounded.

c. **Do not expose power tools to rain or wet conditions.** Water entering a power tool will increase the risk of electric shock.

d. **Do not abuse the cord. Never use the cord for carrying, pulling or unplugging the power tool. Keep cord away from heat, oil, sharp edges or moving parts.** Damaged or entangled cords increase the risk of electric shock.

e. **When operating a power tool outdoors, use an extension cord suitable for outdoor use.** Use of a cord suitable for outdoor use reduces the risk of electric shock.

f. **If operating a power tool in a damp location is unavoidable, use a residual current device (RCD) protected supply.** Use of an RCD reduces the risk of electric shock.

3. **Personal safety**

a. **Stay alert, watch what you are doing and use common sense when operating a power tool. Do not use a power tool while you are tired or under the influence of drugs, alcohol or medication.** A moment of inattention while operating power tools may result in serious personal injury.

b. **Use personal protective equipment. Always wear eye protection.** Protective equipment such as dust mask, non-skid safety shoes, hard hat, or hearing protection used for appropriate conditions will reduce personal injuries.

c. **Prevent unintentional starting. Ensure the switch is in the off-position before connecting to power source and/or battery pack, picking up or carrying the tool.** Carrying power tools with your finger on the switch or energising power tools that have the switch on invites accidents.

d. **Remove any adjusting key or wrench before turning the power tool on.** A wrench or a key left attached to a rotating part of the power tool may result in personal injury.

e. **Do not overreach. Keep proper footing and balance at all times.** This enables better control of the power tool in unexpected situations.

f. **Dress properly. Do not wear loose clothing or jewellery. Keep your hair, clothing and gloves away from moving parts.** Loose clothes, jewellery or long hair can be caught in moving parts.

g. **If devices are provided for the connection of dust extraction and collection facilities, ensure these are connected and properly used.** Use of dust collection can reduce dust-related hazards.

4. **Power tool use and care**

a. **Do not force the power tool. Use the correct power tool for your application.** The correct power tool will do the job better and safer at the rate for which it was designed.

b. **Do not use the power tool if the switch does not turn it on and off.** Any power tool that cannot be controlled with the switch is dangerous and must be repaired.

c. **Disconnect the plug from the power source and/or the battery pack from the power tool before making any adjustments, changing accessories, or storing power tools.** Such preventive safety measures reduce the risk of starting the power tool accidentally.

d. **Store idle power tools out of the reach of children and do not allow persons unfamiliar with the power tool or these instructions to operate the power tool.** Power tools are dangerous in the hands of untrained users.

e. **Maintain power tools. Check for misalignment or binding of moving parts, breakage of parts and any other condition that may affect the power tools operation. If damaged, have the power tool repaired before use.** Many accidents are caused by poorly maintained power tools.

f. **Keep cutting tools sharp and clean.** Properly maintained cutting tools with sharp cutting edges are less likely to bind and are easier to control.

g. **Use the power tool, accessories and tool bits etc. in accordance with these instructions, taking into account the working conditions and the work to be performed.** Use of the power tool for operations different from those intended could result in a hazardous situation.

5. **Battery tool use and care**

a. **Recharge only with the charger specified by the manufacturer.** A charger that is suitable for one type of battery pack may create a risk of fire when used with another battery pack.

b. **Use power tools only with specifically designated battery packs.** Use of any other battery packs may create a risk of injury and fire.

c. **When battery pack is not in use, keep it away from other metal objects, like paper clips, coins, keys, nails, screws or other small metal objects, that can make a connection from one terminal to another.** Shorting the battery terminals together may cause burns or a fire.

d. **Under abusive conditions, liquid may be ejected from the battery; avoid contact. If contact accidentally occurs, flush with water. If liquid contacts eyes, additionally seek medical help.** Liquid ejected from the battery may cause irritation or burns.

6. **service**

a. **Have your power tool serviced by a qualified repair person using only identical replacement parts.** This will ensure that the safety of the power tool is maintained.

Additional power tool safety warnings



Warning! Additional safety warnings for sanders



Warning! Contact with or inhalation of dusts arising from sanding applications may endanger the health of the operator and possible bystanders. Wear a dust mask specifically designed for protection against dust and fumes and ensure that persons within or entering the work area are also protected.

- **Hold power tool by insulated gripping surfaces when performing an operation where the sanding accessory may contact hidden wiring.** Accessory contacting a "live" wire may make exposed metal parts of the power tool "live" and could give the operator an electric shock.
- **Use clamps or another practical way to secure and support the workpiece to a stable platform.** Holding the work by hand or against your body leaves it unstable and may lead to loss of control.



Warning! Take special care when sanding some woods (e.g. beech, oak) and metal which may produce toxic dust. Wear a dust mask specifically designed for protection against toxic dust and fumes and ensure that persons within or entering the work area are also protected.



Warning! Use this tool in a well ventilated area when sanding ferrous metals. Do not operate the tool near flammable liquids, gases or dust. Sparks or hot particles from sanding or arcing motor brushes may ignite combustible materials.



Warning! Do not sand magnesium! There is a risk of fire or explosions.

- Thoroughly remove all dust after sanding.
- The intended use is described in this instruction manual. The use of any accessory or attachment or performance of any operation with this tool other than those recommended in this instruction manual may present a risk of personal injury and/or damage to property.

Safety when sanding paint



Warning! Observe the applicable regulations for sanding paint. Pay special attention to the following:

- Whenever possible, use a vacuum extractor for dust collection.
- Take special care when sanding paint which is possibly lead based and may produce toxic dust:
  - Do not let children or pregnant women enter the work area.
  - All persons entering the work area should wear a mask specially designed for protection against lead paint dust and fumes.
  - Do not eat, drink or smoke in the work area.
- Dispose of dust particles and any other removal debris safely.

Safety of others

- This appliance is not intended for use by persons (including children) with reduced physical, sensory or mental capabilities, or lack of experience and knowledge, unless they have been given supervision or instruction concerning use of the appliance by a person responsible for their safety.
- Children should be supervised to ensure that they do not play with the appliance.

Residual risks.

Additional residual risks may arise when using the tool which may not be included in the enclosed safety warnings. These risks can arise from misuse, prolonged use etc.
Even with the application of the relevant safety regulations and the implementation of safety devices, certain residual risks can not be avoided. These include:

- Injuries caused by touching any rotating/moving parts.
- Injuries caused when changing any parts, blades or accessories.
- Injuries caused by prolonged use of a tool. When using any tool for prolonged periods ensure you take regular breaks.
- Impairment of hearing.
- Health hazards caused by breathing dust developed when using your tool (example:- working with wood, especially oak, beech and MDF.)

Vibration

The declared vibration emission values stated in the technical data and the declaration of conformity have been measured in accordance with a standard test method provided by EN 60745 and may be used for comparing one tool with another. The declared vibration emission value may also be used in a preliminary assessment of exposure.

Warning! The vibration emission value during actual use of the power tool can differ from the declared value depending on the ways in which the tool is used. The vibration level may increase above the level stated.
When assessing vibration exposure to determine safety measures required by 2002/44/EC to protect persons regularly using power tools in employment, an estimation of vibration exposure should consider, the actual conditions of use and the way the tool is used, including taking account of all parts of the operating cycle such as the times when the tool is switched off and when it is running idle in addition to the trigger time.

Additional safety instructions for batteries and chargers

Batteries

- Never attempt to open for any reason.

- Do not expose the battery to water.
- Do not store in locations where the temperature may exceed 40 °C.
- Charge only at ambient temperatures between 10 °C and 40 °C.
- Charge only using the charger provided with the tool.
- When disposing of batteries, follow the instructions given in the section "Protecting the environment".


Do not attempt to charge damaged batteries.

Chargers

- Use your BLACK+DECKER charger only to charge the battery in the tool with which it was supplied. Other batteries could burst, causing personal injury and damage.
- Never attempt to charge non-rechargeable batteries.
- Have defective cords replaced immediately.
- Do not expose the charger to water.
- Do not open the charger.
- Do not probe the charger.


The charger is intended for indoor use only.


Read the instruction manual before use.

Labels on tool

The following pictograms along with the date code are shown on the tool:


Warning! To reduce the risk of injury, the user must read the instruction manual.


Wear a dust mask.

Electrical safety


Your charger is double insulated; therefore no earth wire is required. Always check that the mains voltage corresponds to the voltage on the rating plate. Never attempt to replace the charger unit with a regular mains plug.

- If the supply cord is damaged, it must be replaced by the manufacturer or an authorised BLACK+DECKER Service Centre in order to avoid a hazard.

Features

This tool includes some or all of the following features.

1. On/off switch
2. Dust collection cassette
3. Sanding base
4. Finger attachment
5. Battery

Accessories

The accessories supplied with your sander depend upon the model that you have purchased. All the accessories listed below are available in our range. If you require an accessory that is listed below but is not supplied with your sander please visit our website at www.blackanddecker.eu.
The performance of your tool depends on the accessory used. BLACK+DECKER accessories are engineered to high quality standards and designed to enhance the performance of your tool. By using these accessories you will get the very best from your tool.

Item	Description
	**Detail finger.** For small hard-to-reach areas. The detail finger can be used for light sanding and for sanding into corners. **(Part Number - X32214-XJ)**
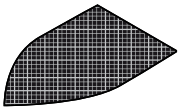	**240 grit sanding mesh.** For a fine finish for large detail sanding. **(Part Number - X39132-XJ)** **120 grit sanding mesh.** For a medium finish for large detail sanding. **(Part Number - X39127-XJ)** **80 grit sanding mesh.** For a coarse finish for large detail sanding. **(Part Number - X39122-XJ)**
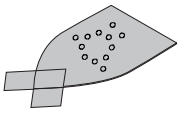	**240 grit large detail sanding sheet with two replacement tips.** For a fine finish for large detail sanding. **(Part Number - X31019-XJ)** **120 grit large detail sanding sheet with two replacement tips.** For a medium finish for large detail sanding. **(Part Number - X31009-XJ)** **60 grit large detail sanding sheet with two replacement tips.** For a coarse finish for large detail sanding. **(Part Number - X31039-XJ)**

Item	Description
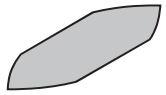	**120 grit detailed finger sanding sheet.** For a medium finish for detailed sanding. **(Part Number - X3277-XJ)**

Charging procedure (Fig. A)

BLACK+DECKER chargers are designed to charge BLACK+DECKER battery packs.

- Plug the charger (6) into an appropriate outlet before inserting the battery pack (5).
- Insert the battery pack (5) into the charger (6) as shown in figure A.
- The LED (6a) will flash indicating that the battery is being charged.
- The completion of charge is indicated by the LED (6a) remaining on continuously. The pack is fully charged and may be used at this time or left on the charger.

Note: Recharge discharged batteries as soon as possible after use or battery life may be greatly diminished. For longest battery life, do not discharge batteries fully.
It is recommended that the batteries be recharged after each use.

Leaving the battery in the charger

The charger (6) and battery pack (5) can be left connected with the LED glowing indefinitely.
The charger will keep the battery pack fresh and fully charged.

Important charging notes

- Longest life and best performance can be obtained if the battery pack is charged when the air temperature is between 65°F and 75°F (18°- 24°C). DO NOT charge the battery pack in an air temperature below +40°F (+4.5°C), or above +105°F (+40.5°C). This is important and will prevent serious damage to the battery pack.
- The charger and battery pack may become warm to touch while charging. This is a normal condition, and does not indicate a problem. To facilitate the cooling of the battery pack after use, avoid placing the charger or battery pack in a warm environment such as in a metal shed, or an uninsulated trailer.
- If the battery pack does not charge properly:
  - Check current at receptacle by plugging in a lamp or other appliance.
  - Check to see if receptacle is connected to a light switch which turns power off when you turn out the lights.
  - Move charger and battery pack to a location where the surrounding air temperature is approximately 65°F - 75°F (18°- 24°C).
  - If charging problems persist, take the tool, battery pack and charger to your local service center.
- The battery pack should be recharged when it fails to produce sufficient power on jobs which were easily done previously. DO NOT CONTINUE to use under these conditions. Follow the charging procedure. You may also charge a partially used pack whenever you desire with no adverse affect on the battery pack.
- Foreign materials of a conductive nature such as, but not limited to, steel wool, aluminium foil, or any buildup of metallic particles should be kept away from charger cavities. Always unplug the charger from the power supply when there is no battery pack in the cavity. Unplug charger before attempting to clean.
- Do not freeze or immerse charger in water or any other liquid.

Warning! Do not allow any liquid to get inside charger. Never attempt to open the battery pack for any reason. If the plastic housing of the battery pack breaks or cracks, return to a service center for recycling.

Charger Diagnostics (Fig.B)

Refer to the indicators in figure B for the charge status of the battery pack.

Bad Battery

If you see a bad battery blink pattern, do not continue to charge this battery. Return it to a service center or a collection site for recycling.

Hot/Cold Pack Delay

When the charger detects a battery pack that is too hot or too cold, it automatically starts a Hot/Cold Pack Delay, suspending charging until the battery pack has reached an appropriate temperature. The charger then automatically switches to the pack charging mode. This feature ensures maximum battery pack life. A cold battery pack will charge at a slower rate than a warm battery pack. The pack will charge at that slower rate throughout the entire charging cycle and will not return to maximum charge rate even if the pack warms.

Installing and removing the battery pack from the tool

To install battery pack (Fig. C)

- Insert battery (5) into tool foot until an audible click is heard (Figure. C)
- Ensure battery pack is fully seated and fully latched into position.

To remove battery pack (Fig.D)

- Depress the battery release button (5a) as shown in figure D and pull battery pack (5) out of tool foot.

Assembly

Warning! Before assembly, make sure that the tool is switched off and the battery is removed.

Fitting sanding mesh (Fig. E)

- Hold the tool with the sanding base facing upwards.
- Place the sanding mesh (7) onto the sanding base, making sure that the holes in the sheet line up with the holes in the base.

Fitting sanding sheets (Fig. F - Optional accessory)

- Detach the two additional diamond-shaped tips (9) from the sanding sheet (8).

The diamond-shaped tip (9) can be reversed and replaced when worn.

- When the front part of the tip (9) is worn, detach it from the sheet, reverse it and press it onto the sanding base again.
- When the whole tip is worn, remove it from the sanding base and fit a new tip.

For optimal dust collection, ensure the correct type of sanding paper is used.

Finger attachment (Fig. G)

The finger attachment is used for fine detail sanding.

- Remove the screw (11).
- Remove the diamond-shaped tip (10) from the sanding base.
- Fit the finger attachment (4) onto the sanding base.
- Fit and tighten the screw (11).
- Fit the appropriate sanding sheet onto the finger attachment.

Replacing diamomnd shaped tip (Fig. G1)

- Replace the diamond shaped tip (10).
- Replace and tighten screw (11).

Fitting and removing the dust cassette (Fig. H)

- Slide the dust cassette (2) onto the connector (2a) and make sure that it is securely located.
- To remove the dust casette, pull it to the rear and away from the rear end of the tool.

Use

Warning! Let the tool work at its own pace. Do not overload.

Switching on and off

- To switch the tool on, depress the on/off switch (1) at the forward position I.
- To switch the tool off, depress the on/off switch (1) at the back position O.

Maintenance

Your tool has been designed to operate over a long period of time with a minimum of maintenance. Continuous satisfactory operation depends upon proper tool care and regular cleaning.

Warning! Before performing any maintenance, switch off and unplug the tool or remove the battery pack.

- Regularly clean the ventilation slots in your tool using a soft brush or dry cloth.
- Regularly clean the motor housing using a damp cloth. Do not use any abrasive or solvent-based cleaner.

Protecting the environment



Separate collection. Products and batteries marked with this symbol must not be disposed of with normal household waste.

Products and batteries contain materials that can be recovered or recycled reducing the demand for raw materials. Please recycle electrical products and batteries according to local provisions. Further information is available at www.2helpU.com

Technical data

		BDCDS18
Input voltage	V_{dc}	18
Oscillations (no load)	min^{-1}	12000
Orbits (no load)	min^{-1}	12000
Sanding base surface	mm^2	8866
Weight	kg	0.85
Battery		BL1518
Voltage	V_{DC}	18
Capacity	Ah	1.5
Type		1
Charger		SSC-250040X
Input voltage	V_{AC}	230
Output voltage	V_{DC}	8 - 20
Current	mA	400

L_{pA} (sound pressure) 68.2 dB(A), Uncertainty (K) 3 dB(A)
L_{WA} (sound power) 79.2 dB(A), Uncertainty (K) 3 dB(A)
Vibration total values (triax vector sum) according to EN 60745:
Vibration emission value (main handle) (a_h) 5.98m/s^2, uncertainty (K) 1.5 m/s^2 Vibration emission value (aux. handle) (a_h) 7.3m/s^2, uncertainty (K) 1.5 m/s^2

ENGLISH (Original instructions)

EC declaration of conformity

MACHINERY DIRECTIVE

CE

Sander - BDCDS18

Black & Decker declares that these products described under "technical data" are in compliance with:
2006/42/EC, EN60745-1:2009+A11:2010, EN60745-2-4:2009+A11:2011

These products also comply with Directive 2014/30/EU and 2011/65/EU. For more information, please contact Black & Decker at the following address or refer to the back of the manual.
The undersigned is responsible for compilation of the technical file and makes this declaration on behalf of Black & Decker.



R. Laverick
Engineering Manager
Black & Decker Europe, 210 Bath Road, Slough,
Berkshire, SL1 3YD
United Kingdom
14/11/2016

Guarantee

Black & Decker is confident of the quality of its products and offers consumers a 24 month guarantee from the date of purchase. This guarantee is in addition to and in no way prejudices your statutory rights. The guarantee is valid within the territories of the Member States of the European Union and the European Free Trade Area.

To claim on the guarantee, the claim must be in accordance with Black&Decker Terms and Conditions and you will need to submit proof of purchase to the seller or an authorised repair agent. Terms and conditions of the Black&Decker 2 year guarantee and the location of your nearest authorised repair agent can be obtained on the Internet at www.2helpU.com, or by contacting your local Black & Decker office at the address indicated in this manual.

Please visit our website www.blackanddecker.co.uk to register your new Black & Decker product and receive updates on new products and special offers.

(Übersetzung der ursprünglichen Anweisungen) **DEUTSCH**

Verwendungszweck

Ihr BLACK+DECKER-Schleifgerät BDCDS18 wurde zum Schleifen von Holz, Metall, Kunststoff und lackierten Oberflächen entwickelt. Dieses Gerät ist nicht für den gewerblichen Einsatz vorgesehen.

Sicherheitshinweise

Allgemeine Sicherheitswarnungen für das Gerät

Warnung! Lesen Sie alle Sicherheitswarnhinweise und alle Anweisungen. Die Nichteinhaltung der folgenden Warnungen und Anweisungen kann einen elektrischen Schlag, Brand und/oder schwere Verletzungen verursachen.

Bewahren Sie alle Sicherheitswarnungen und Anweisungen gut auf. Der nachfolgend verwendete Begriff “Gerät” bezieht sich auf netzbetriebene Geräte (mit Netzkabel) und auf akkubetriebene Geräte (ohne Netzkabel).

1. **Sicherheit im Arbeitsbereich**

a. **Halten Sie Ihren Arbeitsbereich sauber und gut ausgeleuchtet.** Unaufgeräumte oder dunkle Bereiche begünstigen Unfälle.

b. **Betreiben Sie das Gerät nicht in Umgebungen, in denen Explosionsgefahr z. B. aufgrund von brennbaren Flüssigkeiten, Gasen oder Staub besteht.** Geräte erzeugen Funken, die den Staub oder die Dämpfe entzünden können.

c. **Halten Sie Kinder und andere Personen während der Benutzung eines Geräts fern.** Bei Ablenkung können Sie die Kontrolle verlieren.

2. **Elektrische Sicherheit**

a. **Der Netzstecker des Geräts muss in die Steckdose passen. Ändern Sie niemals den Stecker in irgendeiner Form. Verwenden Sie keinerlei Adapterstecker an geerdeten Elektrogeräten.** Unveränderte Stecker und passende Steckdosen mindern die Gefahr eines elektrischen Schlages.

b. **Vermeiden Sie Körperkontakt mit geerdeten Oberflächen von Rohren, Heizungen, Herden und Kühlschränken.** Es besteht eine erhöhte Gefahr für einen elektrischen Schlag, wenn Ihr Körper geerdet ist.

c. **Halten Sie Geräte von Regen und Nässe fern.** Das Eindringen von Wasser in ein Gerät erhöht das Risiko eines elektrischen Schlags.

d. **Verwenden Sie das Kabel ordnungsgemäß. Verwenden Sie es niemals zum Tragen. Trennen Sie das Gerät nicht durch Ziehen am Kabel vom Netz.**

Halten Sie das Kabel fern von Hitze, Öl, scharfen Kanten oder beweglichen Teilen. Beschädigte oder verhedderte Kabel erhöhen die Gefahr eines elektrischen Schlages.

e. **Verwenden Sie nur für den Außenbereich zugelassene Verlängerungskabel, wenn Sie mit dem Gerät im Freien arbeiten.** Die Verwendung eines für den Außenbereich geeigneten Verlängerungskabels verringert das Risiko eines elektrischen Schlags.

f. **Wenn das Gerät in einer feuchten Umgebung verwendet werden muss, schließen Sie es unbedingt an eine Steckdose mit Fehlerstromschutzschalter (FI-Schalter) an.** Ein Fehlerstromschutzschalter verringert das Risiko eines elektrischen Schlags.

3. **Sicherheit von Personen**

a. **Seien Sie aufmerksam, achten Sie darauf, was Sie tun, und gehen Sie sachgerecht mit einem Gerät um. Benutzen Sie kein Gerät, wenn Sie müde sind oder unter dem Einfluss von Drogen, Alkohol oder Medikamenten stehen.** Ein Moment der Unachtsamkeit beim Betrieb eines Geräts kann zu schweren Verletzungen führen.

b. **Verwenden Sie eine geeignete Schutzausrüstung. Tragen Sie immer einen Augenschutz.** Das Tragen persönlicher Schutzausrüstung, wie Staubmaske, rutschfeste Sicherheitsschuhe, Schutzhelm oder Gehörschutz, je nach Art und Einsatz des Geräts, verringert das Risiko von Verletzungen.

c. **Vermeiden Sie eine unbeabsichtigte Inbetriebnahme. Vergewissern Sie sich, dass das Gerät ausgeschaltet ist, bevor Sie es an eine Steckdose oder einen Akku anschließen, es hochheben oder tragen.** Wenn Sie beim Tragen des Geräts den Finger am Schalter haben oder das Gerät eingeschaltet an die Stromversorgung anschließen, kann dies zu Unfällen führen.

d. **Entfernen Sie Einstell- oder Schraubenschlüssel, bevor Sie das Gerät einschalten.** Werkzeuge oder Schlüssel, die an rotierenden Teilen des Geräts angebracht sind, können zu Verletzungen führen.

e. **Beugen Sie sich nicht zu weit nach vorne. Sorgen Sie für einen sicheren Stand und halten Sie jederzeit das Gleichgewicht.** Dadurch können Sie das Gerät in unerwarteten Situationen besser kontrollieren.

f. **Tragen Sie geeignete Kleidung. Tragen Sie keine weite Kleidung und keinen Schmuck. Halten Sie Ihre Haare, Kleidung und Handschuhe von beweglichen Teilen fern.** Lose sitzende Kleidung, Schmuck oder lange Haare können sich in den beweglichen Teilen verfangen.

g. **Falls Vorrichtungen zum Absaugen oder Auffangen von Staub vorhanden sind, vergewissern Sie sich, dass diese angeschlossen sind und richtig verwendet werden.** Das Verwenden einer Staubauffangvorrichtung verringert Gefährdungen durch Staub.

4. **Gebrauch und Pflege von Geräten**

a. **Überlasten Sie das Gerät nicht. Verwenden Sie das für Ihre Arbeit passende Gerät.** Das richtige Gerät wird die Aufgabe besser und sicherer erledigen, wenn es bestimmungsgemäß verwendet wird.

b. **Verwenden Sie das Gerät nicht, wenn der Ein-/Ausschalter nicht funktioniert.** Ein Gerät, das sich nicht mehr ein- oder ausschalten lässt, ist gefährlich und muss repariert werden.

c. **Ziehen Sie den Stecker aus der Steckdose, oder trennen Sie das Gerät vom Akku, bevor Sie Einstellungen vornehmen, Zubehörteile wechseln oder das Gerät lagern.** Diese Vorbeugemaßnahmen mindern die Gefahr, dass das Elektrogerät unbeabsichtigt startet.

d. **Bewahren Sie unbenutzte Geräte außerhalb der Reichweite von Kindern auf. Lassen Sie Geräte nicht von Personen benutzen, die damit nicht vertraut sind oder diese Anweisungen nicht gelesen haben.** Geräte sind in den Händen nicht geschulter Personen gefährlich.

e. **Halten Sie das Gerät in einem einwandfreien Zustand. Kontrollieren Sie, ob bewegliche Teile falsch ausgerichtet sind oder klemmen und ob Teile gebrochen oder so beschädigt sind, dass die Funktion des Geräts beeinträchtigt ist. Bei Beschädigungen lassen Sie das Gerät reparieren, bevor Sie es verwenden.** Viele Unfälle entstehen wegen mangelnder Wartung der Geräte.

f. **Halten Sie Schneidgeräte scharf und sauber.** Richtig gewartete Schneidwerkzeuge mit scharfen Klingen blockieren seltener und sind leichter unter Kontrolle zu halten.

g. **Verwenden Sie Gerät, Zubehör, Einsatz-Bits usw. entsprechend diesen Anweisungen und berücksichtigen Sie dabei die Arbeitsbedingungen und die auszuführende Arbeit.** Der Gebrauch von Geräten für andere als die vorgesehenen Zwecke kann zu gefährlichen Situationen führen.

5. **Gebrauch und Pflege von Akkuwerkzeugen**

a. **Laden Sie den Akku nur mit dem vom Hersteller vorgesehenen Ladegerät auf.** Für ein Ladegerät, das nur für eine bestimmte Akkuart geeignet ist, besteht Brandgefahr, wenn es mit anderen Akkus verwendet wird.

b. **Verwenden Sie nur die für das jeweilige Gerät vorgesehenen Akkus.** Die Verwendung anderer Akkus kann zu Verletzungen oder Bränden führen.