BLACK+ DECKER®

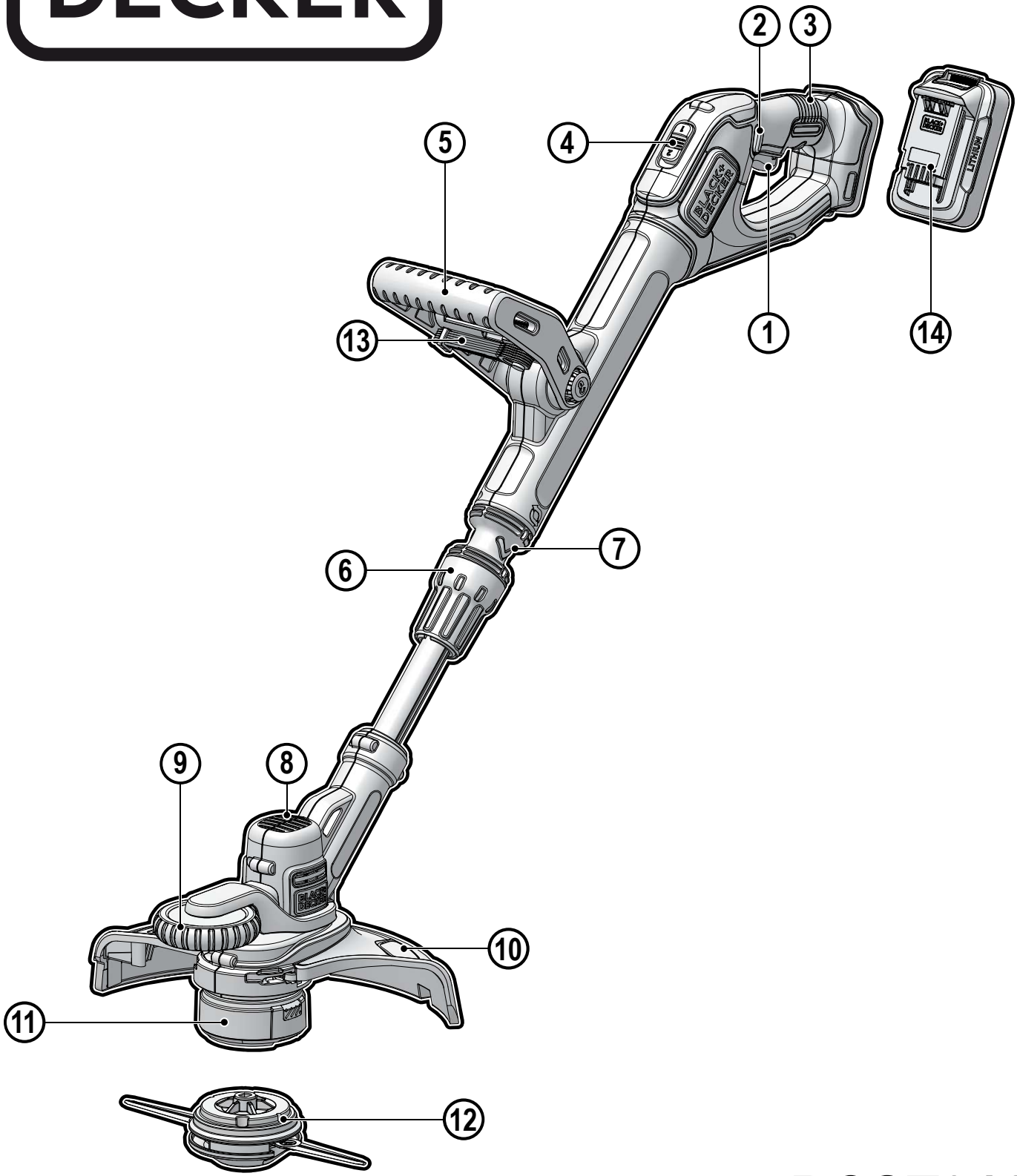

BCST918
BCSTR918

www.blackanddecker.eu

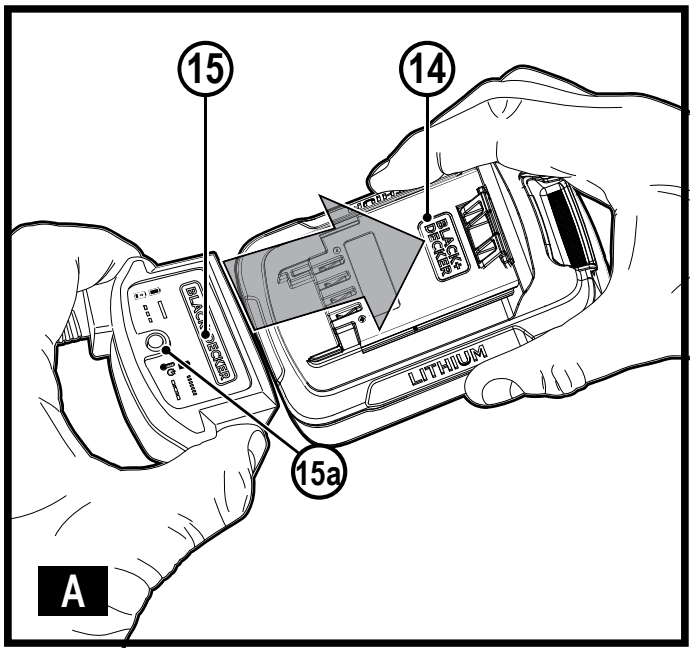
15
14
15a
LITHIUM
A

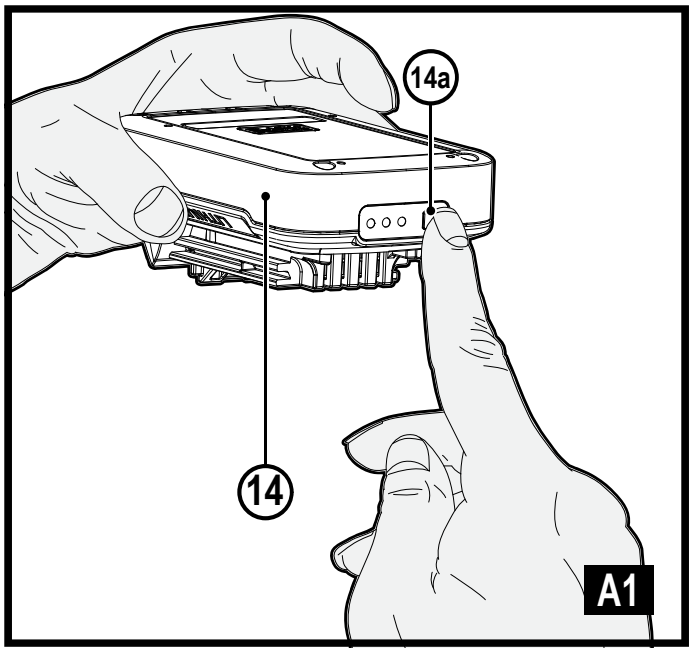
14a
14
A1

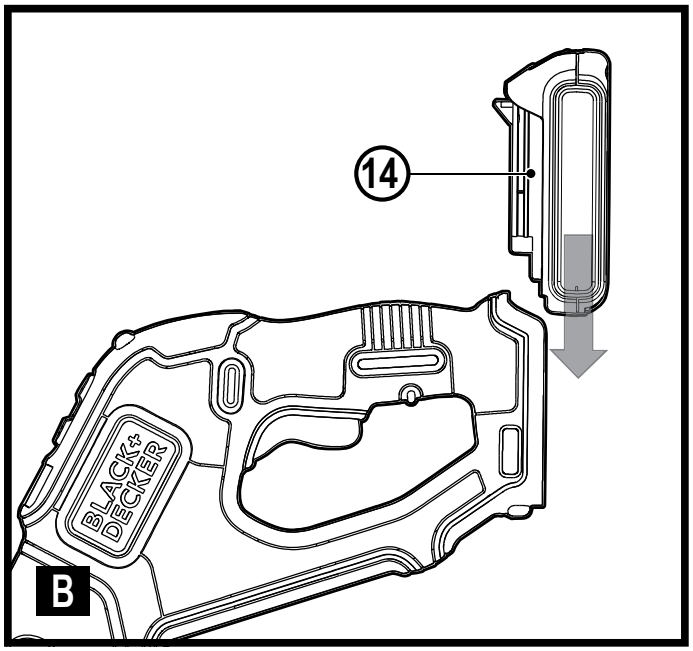
14
BLACK+DECKER
B

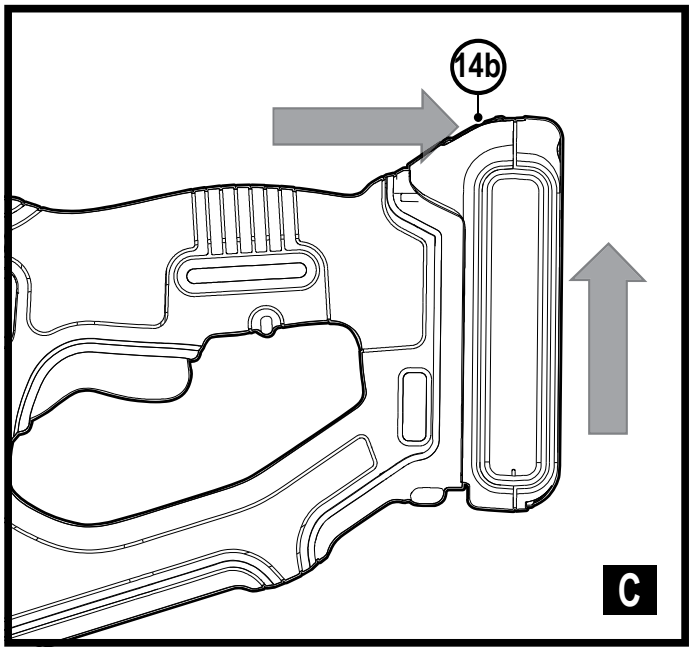
14b
C

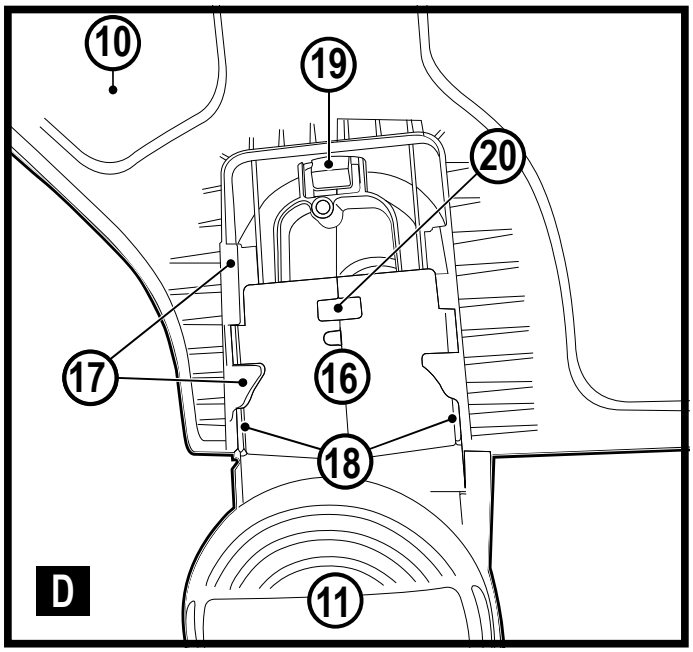
10
19
20
17
16
18
11
D

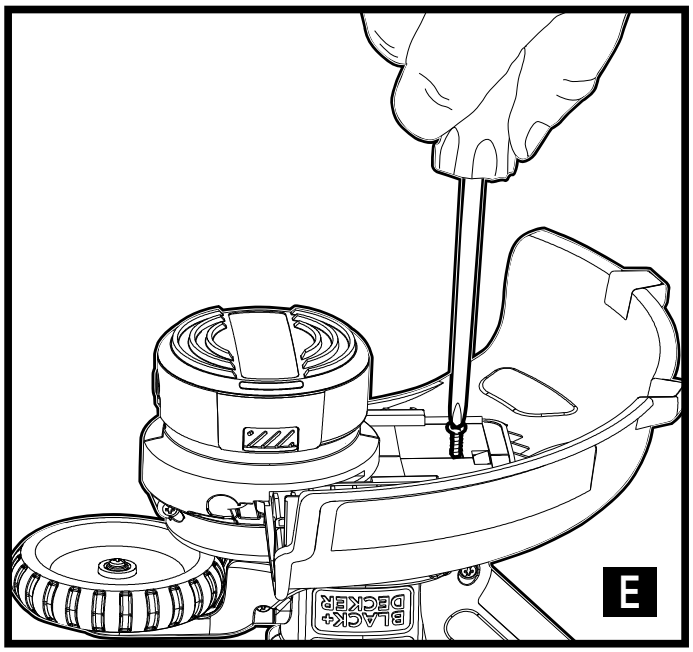
BLACK+DECKER
E

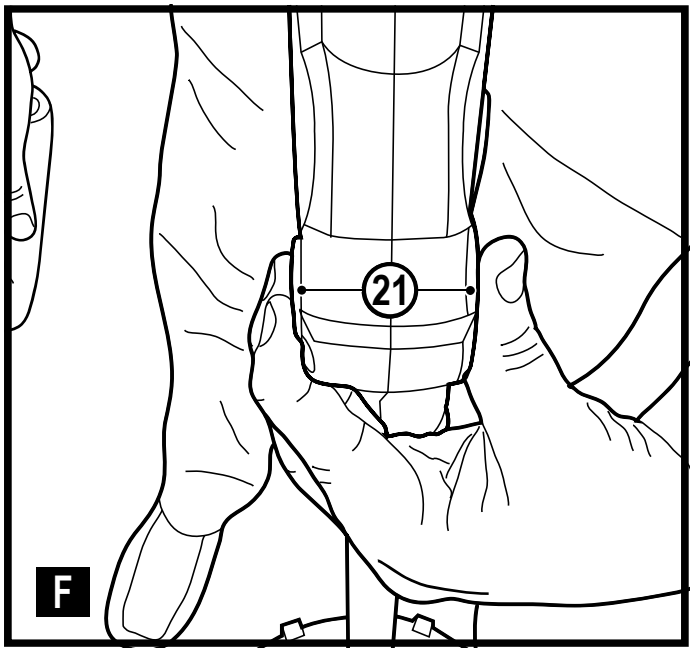
21
F

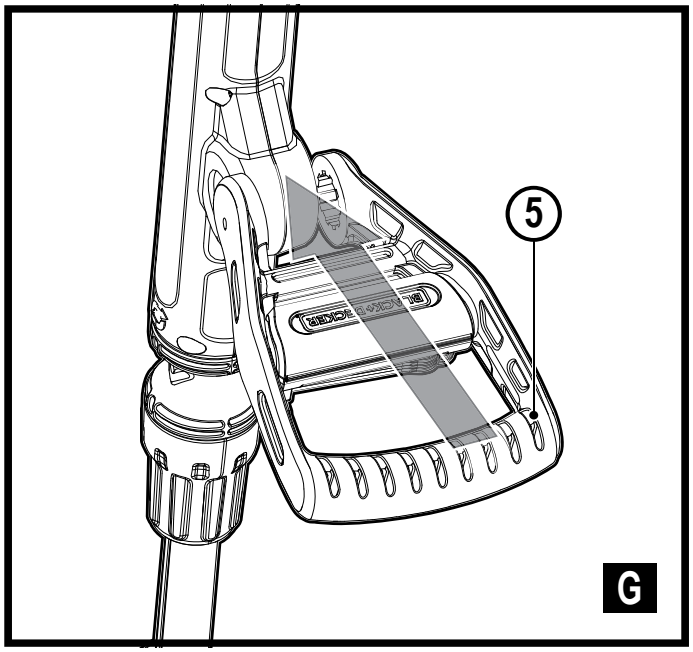
5
G

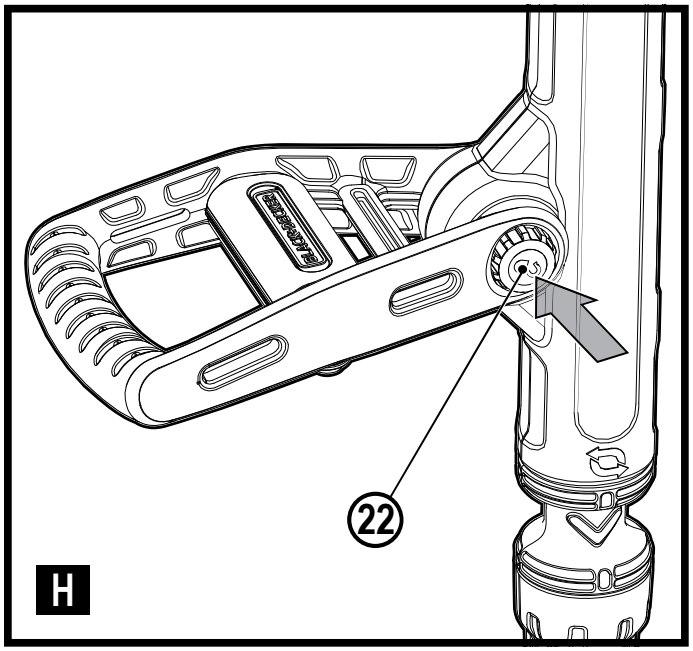
22
H

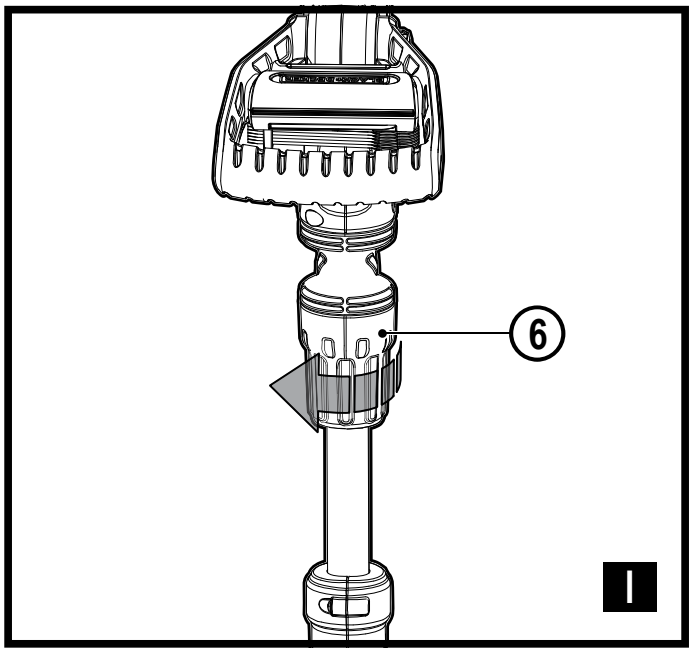
6
I

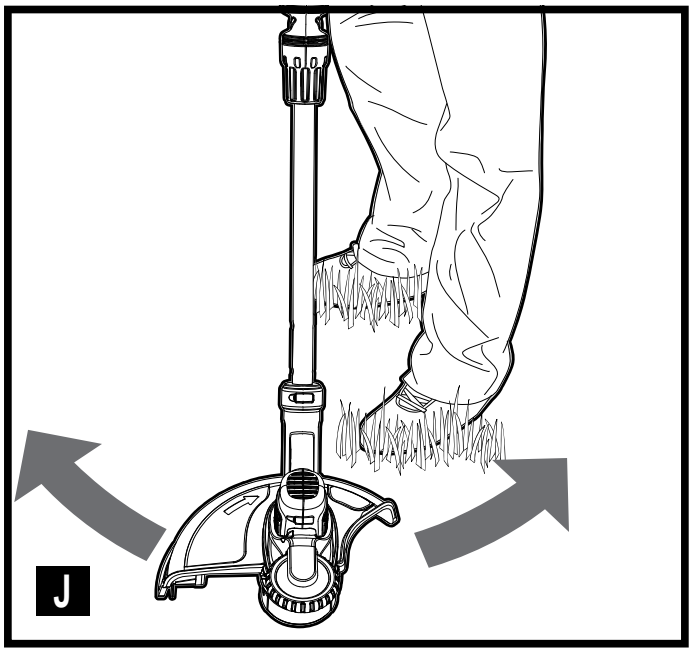
J

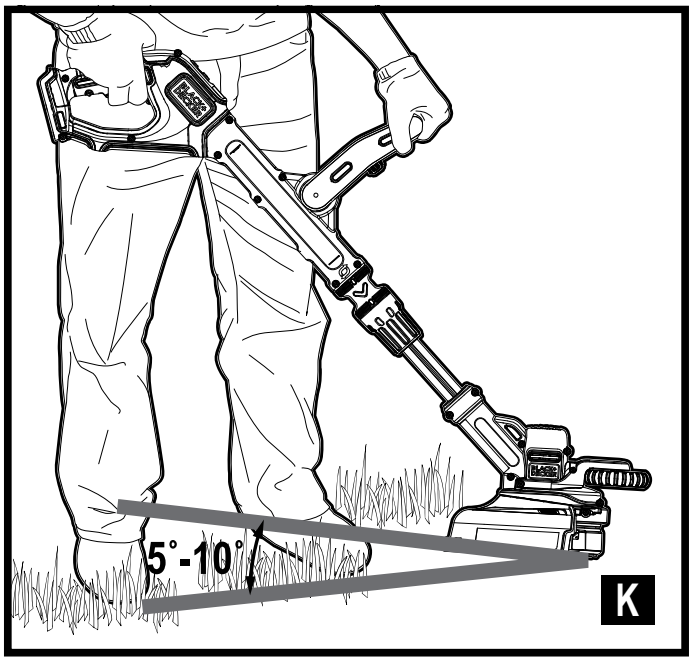
5˚-10˚
K

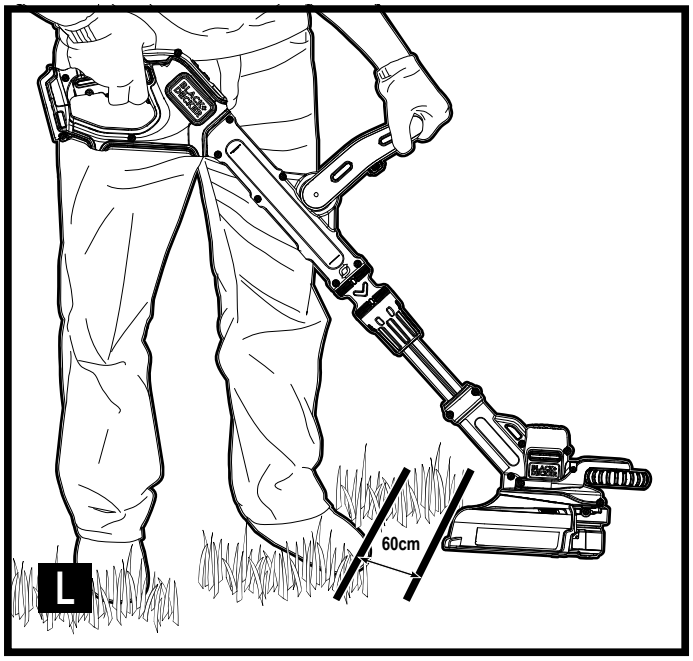
60cm
L

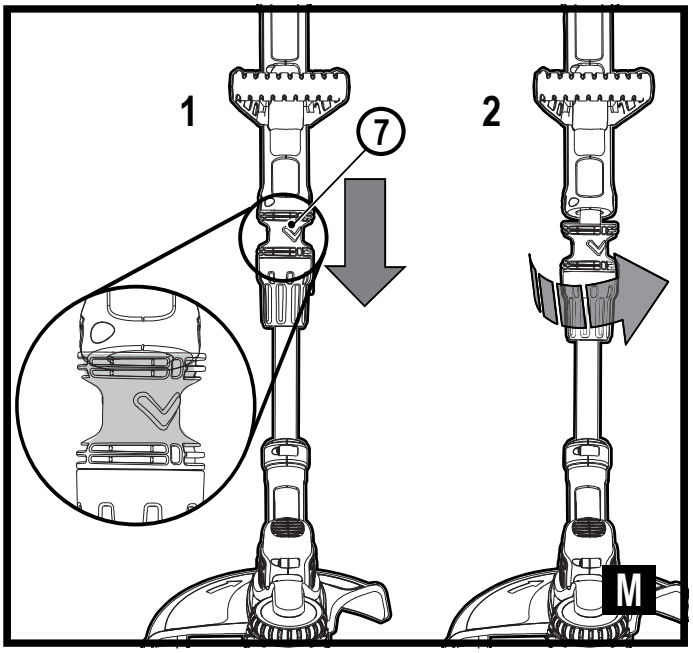
1
7
2
M

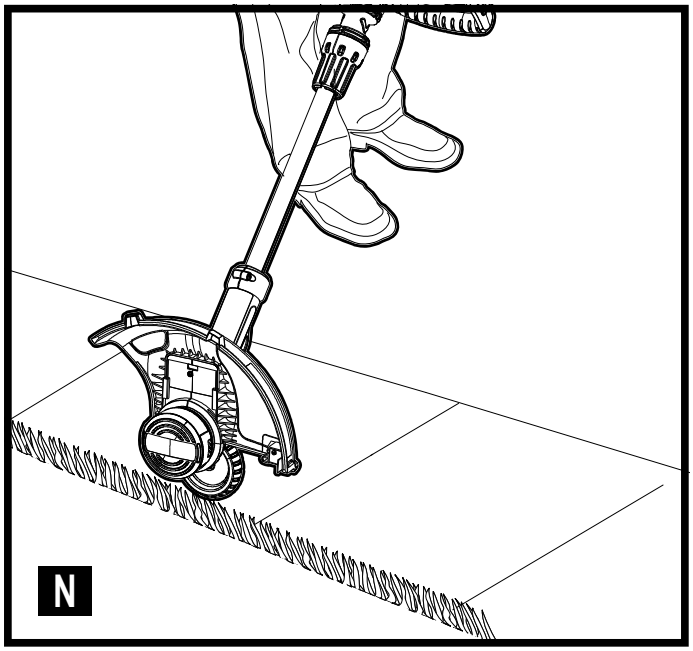
N

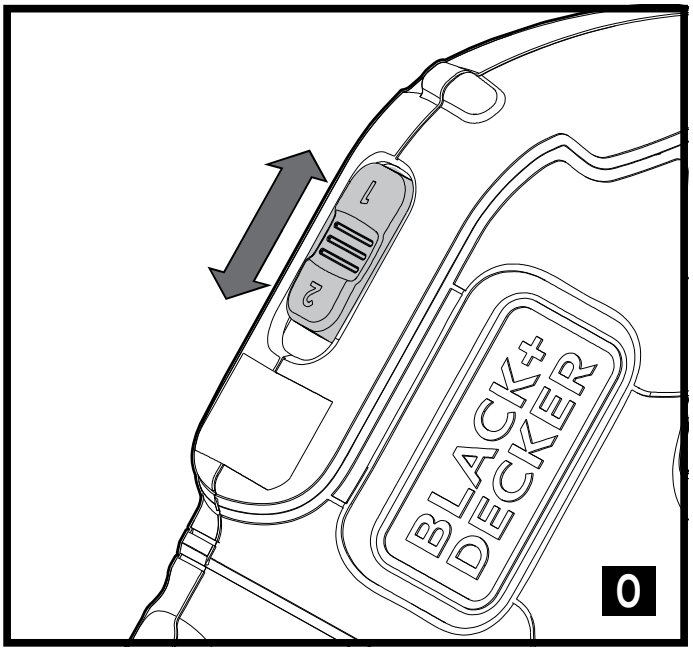
1
2
BLACK+DECKER
O

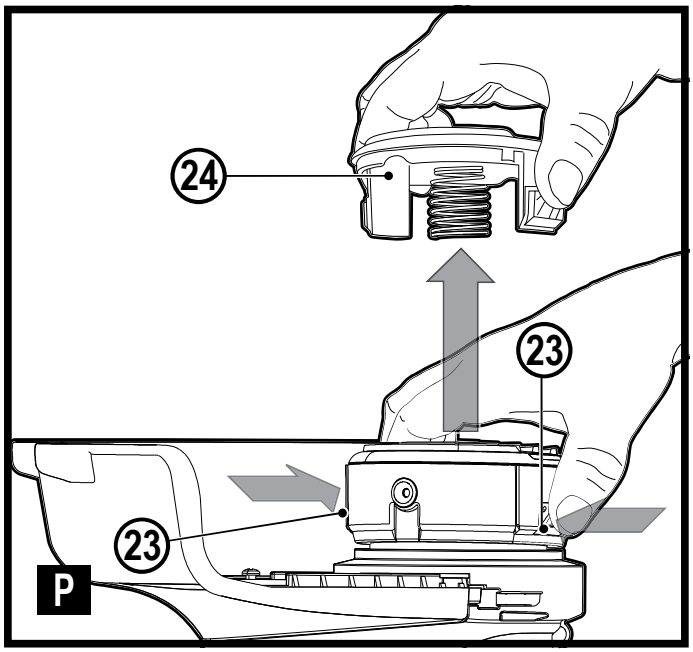
24
23
23
P

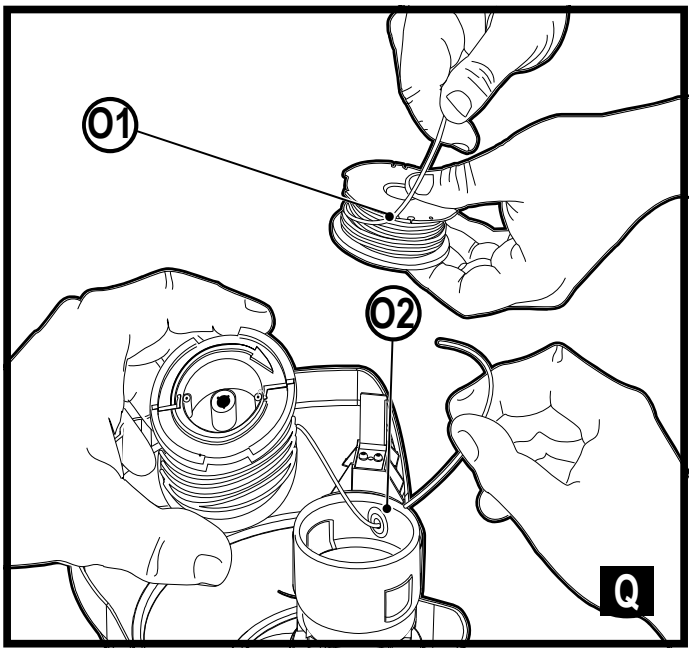
O1
O2
Q

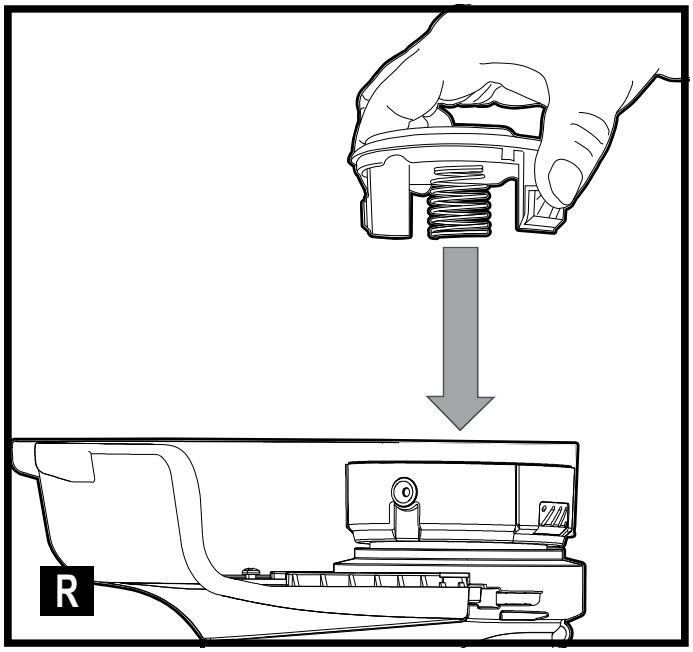
R

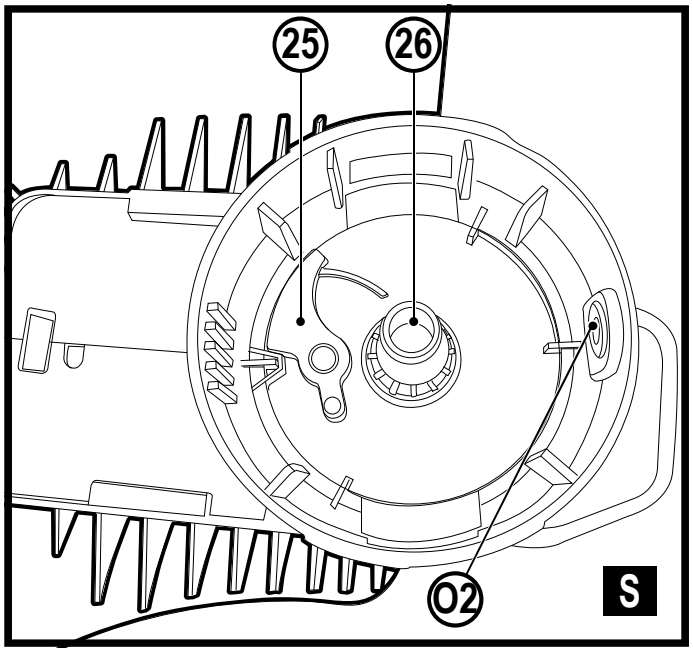
25
26
O2
S

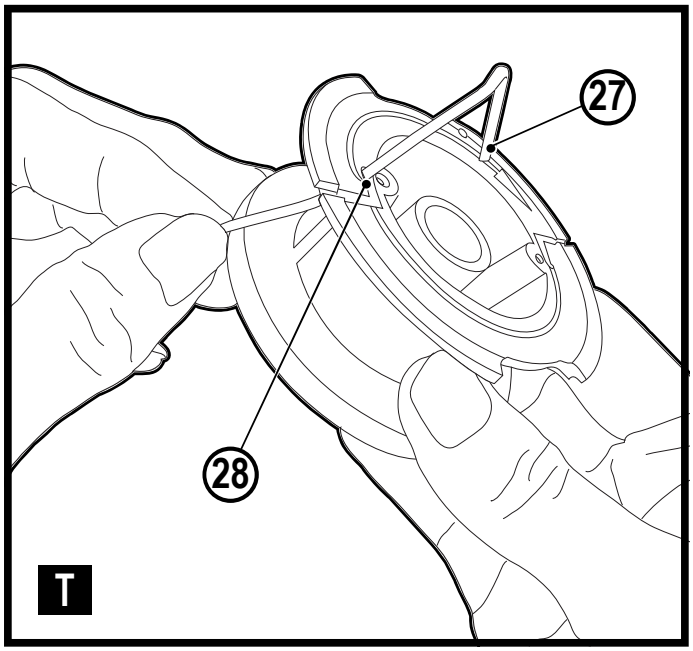
27
28
T

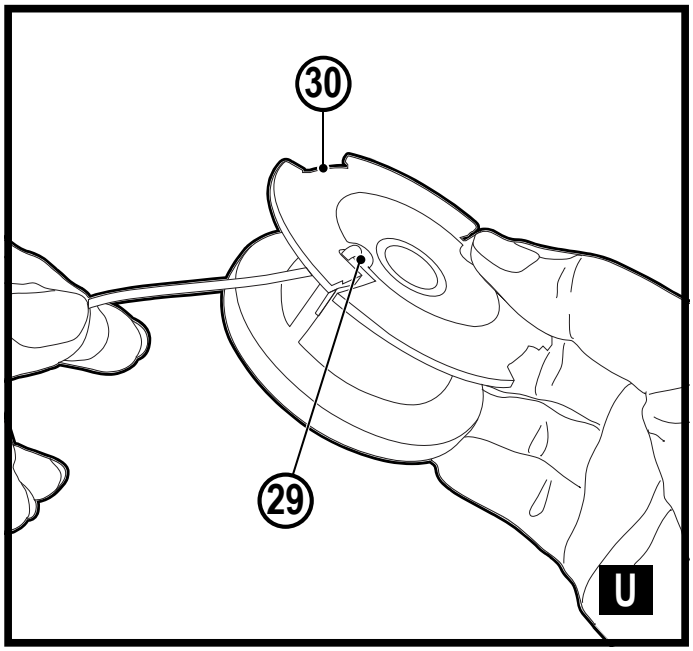
30
29
U

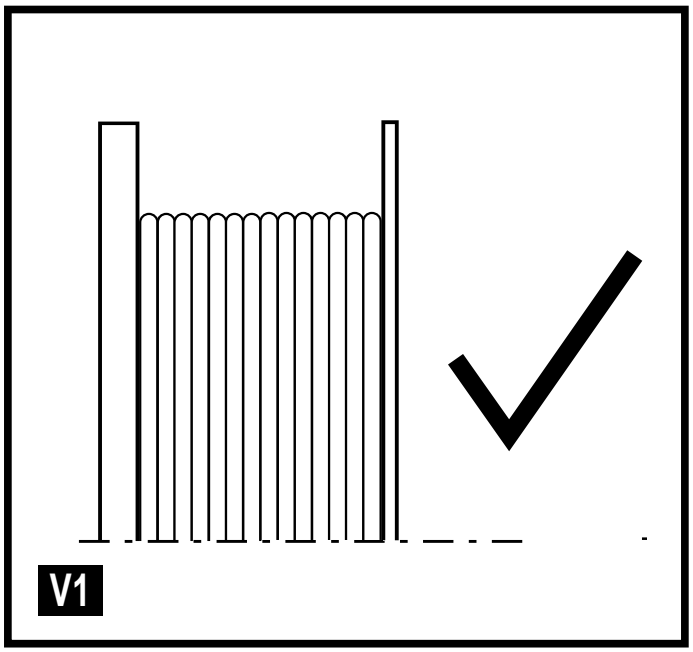
V1

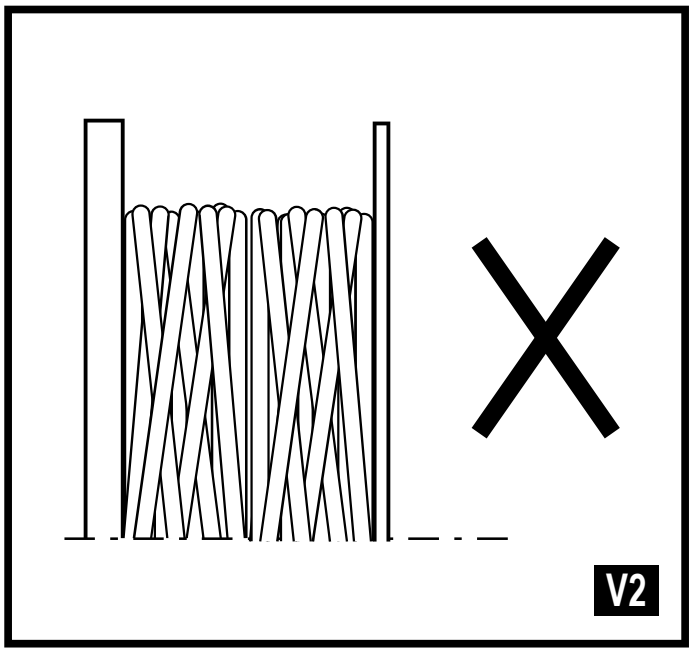
V2

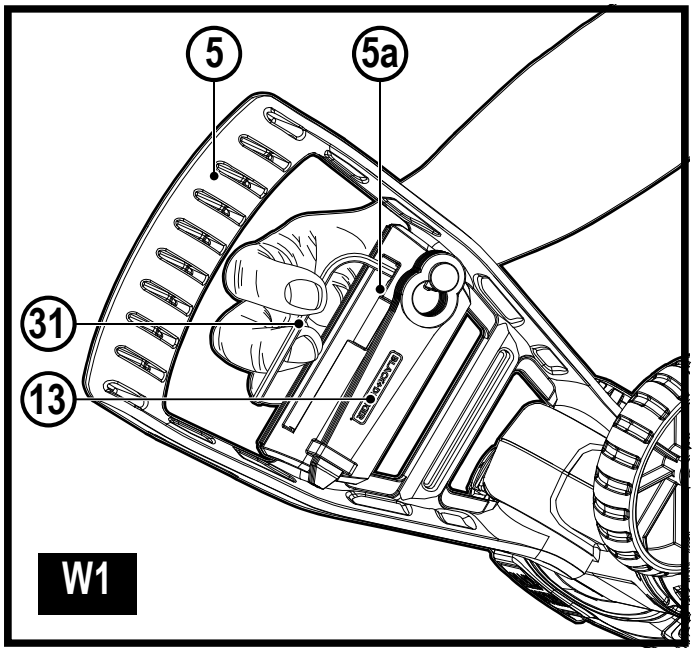
5
5a
31
13
W1

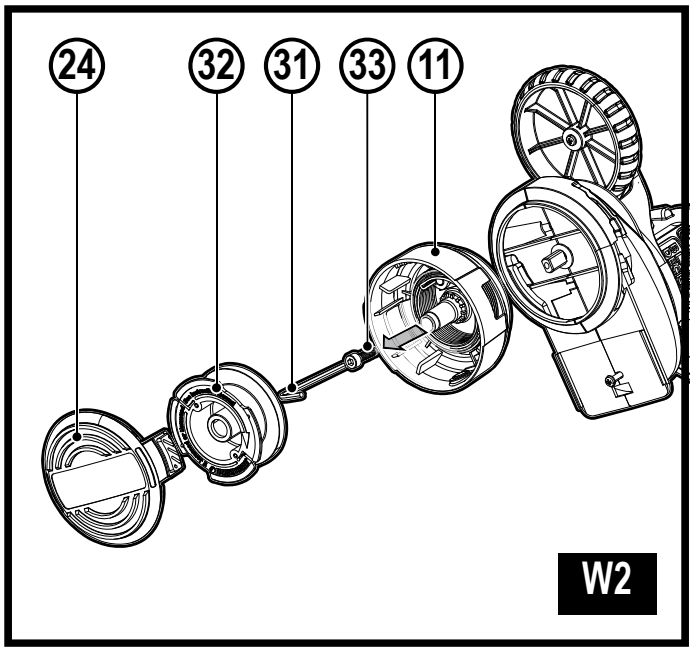
24
32
31
33
11
W2

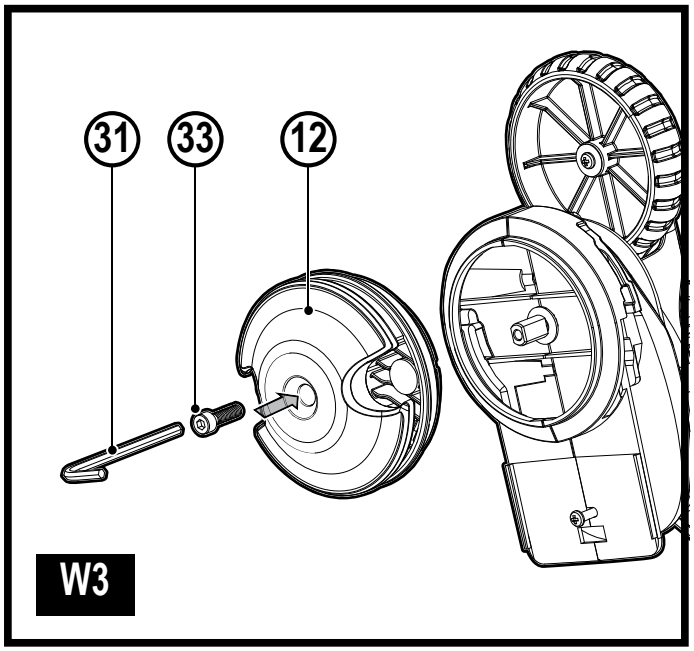
31
33
12
W3

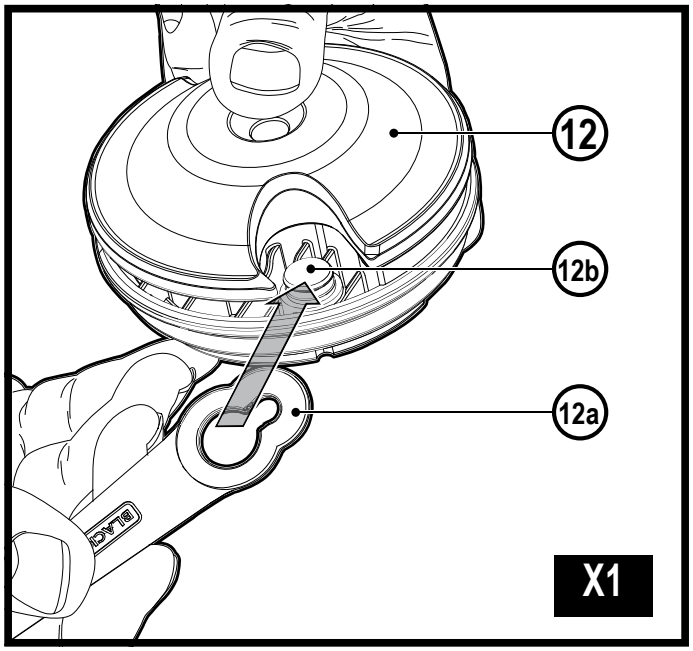
12
12b
12a
X1

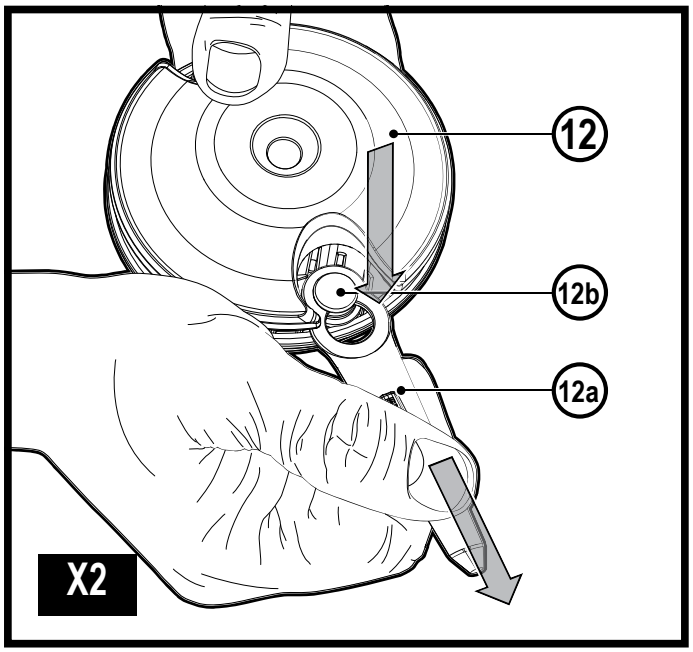
12
12b
12a
X2

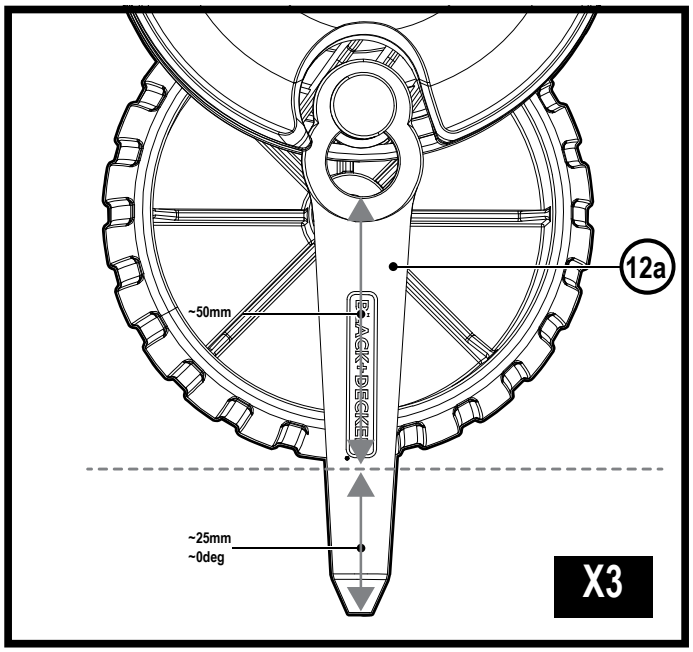
12a
~50mm
~25mm
~0deg
X3

Intended use

Your BLACK+DECKER BCST918, BCSTR918 trimmers have been designed for trimming and finishing lawn edges and to cut grass in confined spaces. These appliances are intended for consumer use only.

Safety instructions

Warning! When using mains-powered or Cordless appliances, basic safety precautions, including the following, should always be followed to reduce the risk of fire, electric shock, personal injury and material damage.

Warning! When using the machine the safety rules must be followed. For your own safety and bystanders please read these instructions before operating the machine. Please keep the instructions safe for later use.

- Read all of this manual carefully before operating the appliance.
- The intended use is described in this manual.
  The use of any accessory or attachment or the performance of any operation with this appliance other than those recommended in this instruction manual may present a risk of personal injury.
- Retain this manual for future reference.

General power tool safety warnings

⚠ **Warning! Read all safety warnings, instructions, illustrations and specifications provided with this power tool.**

Failure to follow the warnings and instructions listed below may result in electric shock, fire and/or serious injury.

Save all warnings and instructions for future reference. The term "power tool" in all of the warnings listed below refers to your mains operated (corded) power tool or battery operated (cordless) power tool.

1. Work area safety

a. Keep work area clean and well lit. Cluttered or dark areas invite accidents.

b. Do not operate power tools in explosive atmospheres, such as in the presence of flammable liquids, gases or dust. Power tools create sparks which may ignite the dust or fumes.

c. Keep children and bystanders away while operating a power tool. Distractions can cause you to lose control.

2. Electrical safety

a. Power tool plugs must match the outlet.
Never modify the plug in any way. Do not use any adapter plugs with earthed (grounded) power tools. Unmodified plugs and matching outlets will reduce risk of electric shock.

b. Avoid body contact with earthed or grounded surfaces such as pipes, radiators, ranges and refrigerators.

There is an increased risk of electric shock if your body is earthed or grounded.

c. **Do not expose power tools to rain or wet conditions.** Water entering a power tool will increase the risk of electric shock.

d. **Do not abuse the cord. Never use the cord for carrying, pulling or unplugging the power tool. Keep cord away from heat, oil, sharp edges or moving parts.** Damaged or entangled cords increase the risk of electric shock.

e. **When operating a power tool outdoors, use an extension cord suitable for outdoor use.** Use of a cord suitable for outdoor use reduces the risk of electric shock.

f. **If operating a power tool in a damp location is unavoidable, use a residual current device (RCD) protected supply.** Use of an RCD reduces the risk of electric shock.

3. Personal safety

a. **Stay alert, watch what you are doing and use common sense when operating a power tool.**
Do not use a power tool while you are tired or under the influence of drugs, alcohol or medication. A moment of inattention while operating power tools may result in serious personal injury.

b. **Use personal protective equipment. Always wear eye protection.** Protective equipment such as a dust mask, non-skid safety shoes, hard hat, or hearing protection used for appropriate conditions will reduce personal injuries.

c. **Prevent unintentional starting. Ensure the switch is in the off-position before connecting to power source and/or battery pack, picking up or carrying the tool.** Carrying power tools with your finger on the switch or energising power tools that have the switch on invites accidents.

d. **Remove any adjusting key or wrench before turning the power tool on.** A wrench or a key left attached to a rotating part of the power tool may result in personal injury.

e. **Do not overreach. Keep proper footing and balance at all times.** This enables better control of the power tool in unexpected situations.

f. **Dress properly. Do not wear loose clothing or jewellery. Keep your hair, clothing and gloves away from moving parts.** Loose clothes, jewellery or long hair can be caught in moving parts.

g. **If devices are provided for the connection of dust extraction and collection facilities, ensure these are connected and properly used.** Use of dust collection can reduce dust-related hazards.

h. **Do not let familiarity gained from frequent use of tools allow you to become complacent and ignore tool safety principles.** A careless action can cause severe injury within a fraction of a second.

4. Power tool use and care

a. **Do not force the power tool. Use the correct power tool for your application.** The correct power tool will do the job better and safer at the rate for which it was designed.

b. **Do not use the power tool if the switch does not turn it on and off.** Any power tool that cannot be controlled with the switch is dangerous and must be repaired.

c. **Disconnect the plug from the power source and/or the battery pack from the power tool before making any adjustments, changing accessories, or storing power tools.** Such preventive safety measures reduce the risk of starting the power tool accidentally.

d. **Store idle power tools out of the reach of children and do not allow persons unfamiliar with the power tool or these instructions to operate the power tool.**
Power tools are dangerous in the hands of untrained users.

e. **Maintain power tools and accessories.**
Check for misalignment or binding of moving parts, breakage of parts and any other condition that may affect the power tools operation. If damaged, have the power tool repaired before use. Many accidents are caused by poorly maintained power tools.

f. **Keep cutting tools sharp and clean.** Properly maintained cutting tools with sharp cutting edges are less likely to bind and are easier to control.

g. **Use the power tool, accessories and tool bits etc. in accordance with these instructions, taking into account the working conditions and the work to be performed.** Use of the power tool for operations different from those intended could result in a hazardous situation.

h. **Keep handles and grasping surfaces dry, clean and free from oil and grease.** Slippery handles and grasping surfaces do not allow for safe handling and control of the tool in unexpected situations.

5. Battery tool use and care

a. **Recharge only with the charger specified by the manufacturer.** A charger that is suitable for one type of battery pack may create a risk of fire when used with another battery pack.

b. **Use power tools only with specifically designated battery packs.** Use of any other battery packs may create a risk of injury and fire.

c. **When battery pack is not in use, keep it away from other metal objects, like paper clips, coins, keys, nails, screws, or other small metal objects, that can make a connection from one terminal to another.** Shorting the battery terminals together may cause burns or a fire.

d. **Under abusive conditions, liquid may be ejected from the battery; avoid contact. If contact accidentally occurs, flush with water.** If liquid contacts eyes, additionally seek medical help. Liquid ejected from the battery may cause irritation or burns.

e. **Do not use a battery pack or tool that is damaged or modified.** Damaged or modified batteries may exhibit unpredictable behaviour resulting in fire, explosion or risk of injury.

f. **Do not expose a battery pack or tool to fire or excessive temperature.** Exposure to fire or temperature above 130 °C may cause explosion**.**

g. **Follow all charging instructions and do not charge the battery pack or tool outside the temperature range specified in the instructions.** Charging improperly or at temperatures outside the specified range may damage the battery and increase the risk of fire.

6. **Service**

a. **Have your power tool serviced by a qualified repair person using only identical replacement parts.** This will ensure that the safety of the power tool is maintained.

b. **Never service damaged battery packs.** Service of battery packs should only be performed by the manufacturer or authorized service providers.

Additional power tool safety warnings



Warning! Additional safety warnings for Lawn trimmer and lawn edge trimmer.

- **Do not use the machine in bad weather conditions, especially when there is a risk of lightning.** This decreases the risk of being struck by lightning.
- **Thoroughly inspect the area for wildlife where the machine is to be used.** Wildlife may be injured by the machine during operation.
- **Thoroughly inspect the area where the machine is to be used and remove all stones, sticks, wires, bones, and other foreign objects.** Thrown objects can cause personal injury.
- **Before using the machine, always visually inspect to see that the cutter and the cutter assembly are not damaged.** Damaged parts increase the risk of injury.

- **Keep guards in place. Guards must be in working order and be properly mounted.** A guard that is loose, damaged, or is not functioning correctly may result in personal injury.
- **Keep all cooling air inlets clear of debris.** Blocked air inlets and debris may result in overheating or risk of fire.
- **Wear eye protection and ear protection.** Adequate protective equipment will reduce personal injury.
- **While operating the machine, always wear non-slip and protective footwear. Do not operate the machine when barefoot or wearing open sandals.** This reduces the chance of injury to the feet from contact with the moving cutter.
- **Always wear clothing such as trousers that covers the operator's legs while operating the machine.** Contact with the moving cutter or line may cause injury.
- **Keep bystanders away while operating the machine.** Thrown debris can result in serious personal injury.
- **Do not operate the machine above waist height.** This helps prevent unintended cutter contact and enables better control of the machine in unexpected situations.
- **Exercise caution when operating the machine in wet grass. Walk, never run.** This reduces the risk of slipping and falling which may result in personal injury.
- **Do not operate the machine on excessively steep slopes.** This reduces the risk of loss of control, slipping and falling which may result in personal injury.
- **When working on slopes, always be sure of your footing, always work across the face of slopes, never up or down and exercise extreme caution when changing direction.** This reduces the risk of loss of control, slipping and falling which may result in personalminjury.
- **Keep all power cords and cables away from cutting area.** Power cords or cables may be hidden in hedges or bushes and can be accidentally cut or damaged by the line or cutter.
- **Keep all parts of the body away from the moving trimmer cutter or line. Do not clear material from the machine until it has been disconnected from the power source.** The moving trimmer cutter or line may result in serious personal injury.
- **Carry the machine with the machine switched off and away from your body.** Proper handling of the machine will reduce the likelihood of accidental contact with a moving trimmer cutter or line.
- **Only use replacement cutting heads and trimmer cutters or lines specified by the manufacturer. Do not replace the trimmer cutters or lines with metal wires or blades.**

Incorrect replacement parts may cause loss of control, breakage and injury.

Using your appliance

Always take care when using the appliance.

- Always use safety glasses or goggles.
- Never allow children or people unfamiliar with the instructions to use the appliance.
- Do not allow children or animals to come near the work area or to touch the appliance or power supply cord.
- Close supervision is necessary when the appliance is used near children.
- This appliance is not intended for use by young or infirm persons without supervision.
- This appliance is not to be used as a toy.
- Only use the appliance in daylight or good artificial light.
- Use in a dry location only. Do not allow the appliance to become wet.
- Avoid using the appliance in bad weather conditions, especially when there is a risk of lightning.
- Do not immerse the appliance in water.
- Do not open the body casing. There are not user-serviceable parts inside.
- Do not operate the appliance in explosive atmospheres, such as in the presence of flammable liquids, gases or dust.
- To reduce the risk of damage to plugs or cords, never pull the cable to remove the plug from a socket.
- The appliance is only to be used with the power supply unit provided with the appliance.

Safety of others

- This appliance can be used by children aged from 8 years and above and persons with reduced physical, sensory or mental capabilities or lack of experience and knowledge if they have been given supervision or instruction concerning use of the appliance in a safe way and understand the hazards involved. Children shall not play with the appliance. Cleaning and user maintenance shall not be made by children without supervision.
- Children must be supervised to ensure that they do not play with the appliance.

Residual risks.

Additional residual risks may arise when using the tool which may not be included in the enclosed safety warnings.
These risks can arise from misuse, prolonged use etc.
Even with the application of the relevant safety regulations and the implementation of safety devices, certain residual risks can not be avoided. These include:

- Injuries caused by touching any rotating/moving parts.
- Injuries caused when changing any parts, blades or accessories.

- Injuries caused by prolonged use of a tool. When using any tool for prolonged periods ensure you take regular breaks.
- Impairment of hearing.
- Health hazards caused by breathing dust developed when using your tool (example:- working with wood, especially oak, beech and MDF.)

After use

- When not in use, the appliance should be stored in a dry, well ventilated place out of reach of children.
- Children should not have access to stored appliances.
- When the appliance is stored or transported in a vehicle it should be placed in the boot or restrained to prevent movement following sudden changes in speed or direction.

Inspection and repairs

- Before use, check the appliance for damaged or defective parts. Check for breakage of parts and any other conditions that may affect its operation.
- Do not use the appliance if any part is damaged or defective.
- Have any damaged or defective parts repaired or replaced by an authorised repair agent.
- Never attempt to remove or replace any parts other than those specified in this manual.

Additional safety instructions for grass trimmers

Warning! Cutting elements continue to rotate after the motor is switched off.

- Be familiar with the controls and the proper use of the appliance.
- Always remove the battery from the appliance whenever the appliance is unattended, before clearing a blockage, before cleaning and maintenance, after striking a foreign object or whenever the appliance starts vibrating abnormally.
- Do not use the appliance if the cords are damaged or worn.
- Wear stout shoes or boots to protect your feet.
- Wear long trousers to protect your legs.
- Before using the appliance, check that your cutting path is free from sticks, stones, wire and any other obstacles.
- Only use the appliance in the upright position, with the cutting line near the ground. Never switch the appliance on in any other position.
- Move slowly when using the appliance. Be aware that freshly cut grass is damp and slippery.
- Do not work on steep slopes. Work across the face of slopes, not up and down.
- Never cross gravel paths or roads while the appliance is running.
- Never touch the cutting line while the appliance is running.

- Do not put the appliance down until the cutting line has come to a complete standstill.
- Use only the appropriate type of cutting line or BLACK+DECKER Resin blades. Never use metal cutting line or fishing line.
- Be careful not to touch the line trimming blade.
- Take care to keep the mains cable away from the cutting line. Always be aware of the position of the cable.
- Keep hands and feet away from the cutting line at all times, especially when switching on the motor.
- Before using the appliance and after any impact, check for signs of wear or damage and repair as necessary.
- Never operate the appliance with damaged guards or without guards in place.
- Take care against injury from any device fitted for trimming the filament line length. After extending new cutter line always return the machine to its normal operating position before switching on.
- Always ensure that the ventilation slots are kept clear of debris.
- Do not use the lawn trimmer (edge trimmer), if the cords are damaged or worn.
- Keep extension cords away from cutting elements.

Additional safety instructions for batteries and chargers

Batteries

- Never attempt to open for any reason.
- Do not expose the battery to water.
- Do not store or use the tool and battery pack in locations where the temperature may fall below 4 ˚C (39.2 ˚F) (such as outside sheds or metal buildings in winter), or reach or exceed 40 ˚C (104 ˚F) (such as outside sheds or metal buildings in summer)..
- Charge only at ambient temperatures between 10 °C and 40 °C.
- Charge only using the charger provided with the tool.
- When disposing of batteries, follow the instructions given in the section "Protecting the environment".

Chargers

- Use your BLACK+DECKER charger only to charge the battery in the tool with which it was supplied.
  Other batteries could burst, causing personal injury and damage.
- Never attempt to charge non-rechargeable batteries.
- Have defective cords replaced immediately.
- Do not expose the charger to water.
- Do not open the charger.
- Do not probe the charger.



The charger is intended for indoor use only.



Read the instruction manual before use.

Electrical safety



Your charger is double insulated; therefore no earth wire is required. Always check that the mains voltage corresponds to the voltage on the rating plate.

Never attempt to replace the charger unit with a regular mains plug.

- If the supply cord is damaged, it must be replaced by the manufacturer or an authorised BLACK+DECKER Service Centre in order to avoid a hazard.

Labels on appliance

The following warning symbols are found on the appliance along with the date code:



Read the manual prior to operation.



Wear safety glasses or goggles when operating this appliance.



Wear suitable ear protectors when operating this appliance.



Always remove the battery from the appliance before performing any cleaning or maintenance .



Beware of flying objects. Keep bystanders away from the cutting area.



Do not expose the appliance to rain or high humidity.



Do not use metal blades.



Directive 2000/14/EC guaranteed sound power.

Features

This appliance includes some or all of the following features.

1. Trigger
2. Lock off button
3. Handle
4. Speed control switch
5. Auxiliary handle
6. Height adjust collar
7. Flip to edge collar
8. Trimmer head
9. Edge wheel
10. Guard
11. Spool housing
12. Resin blade Housing
13. Resin blade storage
14. Battery

Charging the battery (Fig. A)

The battery needs to be charged before first use and whenever it fails to produce sufficient power on jobs that were easily done before.

The battery may become warm while charging; this is normal and does not indicate a problem.

Warning! Do not charge the battery at ambient temperatures below 10 °C or above 40 °C. Recommended charging temperature: approx. 24 °C.

Note: The charger will not charge a battery if the cell temperature is below approximately 10 °C or above 40 °C.

The battery should be left in the charger and the charger will begin to charge automatically when the cell temperature warms up or cools down.

- Plug the charger into an appropriate outlet before inserting the battery pack.
- Insert the battery pack into the charger.



The green LED will flash indicating that the battery is being charged.



The completion of charge is indicated by the green LED remaining on continuously. The pack is fully charged and may be used at this time or left in the charger

Warning! Recharge discharged batteries as soon as possible after use or battery life may be greatly diminished.

Charger diagnostics

This charger is designed to detect certain problems that can arise with the battery packs or the power source. Problems are indicated by one LED flashing in different patterns.

Bad Battery



The charger can detect a weak or damaged battery. The red LED flashes in the pattern indicated on the label. If you see this bad battery blink pattern, do not continue to charge the battery. Return it to a service centre or a collection site for recycling

Hot/Cold Pack Delay



When the charger detects a battery that is excessively hot or excessively cold, it automatically starts a Hot/Cold Pack delay, suspending charging until the battery has normalised.

After this happens, the charger automatically switches to the Pack Charging mode. This feature ensures maximum battery life. The red LED flashes in the pattern indicated on the label when the Hot/Cold pack delay is detected.

Leaving the battery in the charger

The charger and battery pack can be left connected with the LED glowing indefinitely. The charger will keep the battery pack fresh and fully charged.

Important charging notes

- Longest life and best performance can be obtained if the battery pack is charged when the air temperature is between 65°F and 75°F (18°- 24°C). DO NOT charge the battery pack in an air temperature below +40°F (+4.5°C), or above +105°F (+40.5°C). This is important and will prevent serious damage to the battery pack .
- The charger and battery pack may become warm to touch while charging. This is a normal condition, and does not indicate a problem. To facilitate the cooling of the battery pack after use, avoid placing the charger or battery pack in a warm environment such as in a metal shed, or an uninsulated trailer
- If the battery pack does not charge properly:
  - Check current at receptacle by plugging in a lamp or other appliance
  - Check to see if receptacle is connected to a light switch which turns power off when you turn out the lights.
  - Move charger and battery pack to a location where the surrounding air temperature is approximately 65°F - 75°F (18°- 24°C).
  - If charging problems persist, take the appliance, battery pack and charger to your local service center.
- The battery pack should be recharged when it fails to produce sufficient power on jobs which were easily done previously. DO NOT CONTINUE to use under these conditions.

  Follow the charging procedure.
  You may also charge a partially used pack whenever you desire with no adverse affect on the battery pack.
- Foreign materials of a conductive nature such as, but not limited to, steel wool, aluminium foil, or any buildup of metallic particles should be kept away from charger cavities. Always unplug the charger from the power supply when there is no battery pack in the cavity. Unplug charger before attempting to clean.
- Do not freeze or immerse charger in water or any other liquid.

Warning! Shock hazard. Do not allow any liquid to get inside charger. Never attempt to open the battery pack for any reason.
If the plastic housing of the battery pack breaks or cracks, return to a service center for recycling.

Battery state of charge indicator (Fig. A1)

The battery includes a state of charge indicator to quickly determine the extent of battery life as shown in figure A1.
By pressing the state of charge button (14a) you can easily view the charge remaining in the battery as illustrated in figure A1.

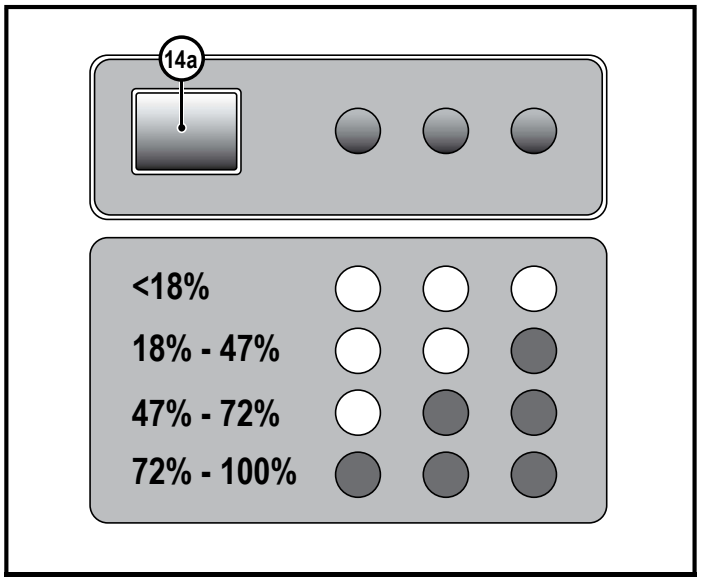

Installing and removing the battery pack from the appliance

Warning! Make certain the lock-off button is not engaged to prevent switch actuation before removing or installing battery.

To install battery pack

Insert battery (14) into appliance until an audible click is heard (Figure B). Ensure battery pack is fully seated and fully latched into position.

To remove battery pack

Depress the battery release button (14b) as shown in Figure C and pull battery pack out of appliance.

Assembly

Warning! Before assembly, make sure that the tool is switched off and the battery has been removed.
Assembly tools required (not supplied):
Phillips Screwdriver.

Fitting the guard

Warning! Remove the battery from the appliance before attempting to attach the guard, edge guide or handle. Never operate appliance without guard firmly in place. The guard must always be on the appliance to protect the user.

- Remove the screw from the guard.
- Turn the trimmer upside down so that you are looking down at the spool cap (11).
- Turn the guard (10) upside down and slide it fully onto the motor housing (16). Make sure the tabs (17) on the guard engage the ribs (18) on the motor housing as shown.
- Continue to slide the guard on until you hear it “snap” into place. The locking tab (19) should snap into the housing slot (20).
- Using a phillips screwdriver, insert the guard screw and tighten securely as shown in Figure E to complete the guard assembly.
- Once the guard is installed, remove the covering from the line cut-off blade, located on the edge of the guard.

Warning! Never use the tool unless the guard is properly fitted.

Attaching the auxiliary handle

- To attach the handle, press in on the buttons (21) on both sides of the upper housing as shown in Figure F.
- Position the handle as shown in Figure G (with the BLACK+DECKER logo facing upward). Partially push the handle on so it will hold the buttons in when you release them with your hand.
- Push the handle completely onto the housing and position it slightly until it “snaps” into place.
- To adjust the handle up or down, press in on the button (22) and raise or lower the handle (Figure H).
- The handle should be adjusted so that your front arm is straight when the trimmer is in the working position.

Height adjustment

Warning! Adjust the length of the trimmer to obtain proper working positions shown.

- The overall height of the trimmer can be adjusted by loosening the height-adjust collar (6) by rotating it in the direction of the arrow shown in Figure I.
- Move the upper housing straight up or down. When the desired height is achieved, tighten the collar by rotating it opposite of the direction shown in Figure I.

Releasing the cutting line (BCST918 only)

In transit, the cutting line is taped to the spool housing.

- Remove the tape holding the cutting line to the spool housing.

Operation

Warning! Always use proper eye protection.
Warning! Before you begin trimming, only use the appropriate type of cutting line or blade.
Note: inspect area to be trimmed and remove any wire, cord, or string-like objects which could become entangled in the rotating line, spool or blade head. Be particularly careful to avoid any wire which might be bent outwardly into the path of the appliance, such as barbs at the base of a chain link fence.

Switching on and off

- To switch the appliance on, push the lock-off button (2), and squeeze the trigger (1).
- To switch the appliance off, release the trigger.

Operating the trimmer

- With the unit on, angle unit and slowly swing the trimmer side to side as shown in Figure J.
- Maintain a cutting angle of 5° to 10° as shown in Figure K. Do not exceed 10° (Figure K). Cut with the tip of the line or blade. To keep distance from hard surfaces use edge wheel (9).
- Maintain a minimum distance of 60 cm between the guard and your feet as shown in Figure L. To acheive this distance adjust the overall height of the trimmer as shown in Figure I.

Convert to edging mode

Warning! The wheeled edge guide should only be used when in the edging mode.The trimmer can be used in trimming mode or edging mode to trim overhanging grass along lawn edges and flower beds. For edging, the trimmer head should be in the position shown in Figure M. If it is not:

- Remove the battery from the trimmer.
- Grasp the flip-to-edge collar (7) and push down as shown in part 1 of Figure M.
- Rotate the flip-to-edge collar 180° counterclockwise as shown in part 2, until the handle snaps back into the upper half of the trimmer.
- To return to trimming position, pull the flip-to-edge collar down and rotate the head clockwise back to its original position.

Note: You will experience faster than normal cutting line wear if the trimmer line is positioned directly over the sidewalk or abrasive surface.

Edging

Warning! When being used as an Edger, stones, pieces of metal and other objects can be thrown out at high speed by the line or blade. The trimmer and guard are designed to reduce the danger. However, **MAKE SURE** that other persons and pets are at least 30m away. Optimum cutting results are achieved on edges deeper than 50 mm.

- Do not use this trimmer to create trenches.
- Using the edging wheel (9), guide the trimmer as shown in Figure N.

- Position the edging wheel on the edge of the sidewalk or abrasive surface so the cutting line is over the grass or dirt area to be edged.
- To make a closer cut, slightly tilt the trimmer.

Speed control & runtime extension mode

This string trimmer gives you the choice to operate at a more efficient speed to extend the runtime for larger jobs, or accelerate the trimmer speed for high-performance cutting (Figure O).

- To extend runtime, pull the speed-control switch (4) back toward the battery (12) into position #1. This mode is best for larger projects that require more time to complete.
- To accelerate the trimmer, push the speed-control switch forward toward the trimmer head (8) into position #2. This mode is best to cut through heavier growth and for applications that need higher RPM.

Note: When in acceleration mode (#2), runtime will be decreased as compared to when trimmer is in extended runtime mode (#1).

Helpful cutting tips

- Use the tip of the string or blade to do the cutting; do not force string head into uncut grass. Use edge guide along such things as fences, houses and flower beds for best practices.
- Wire and picket fences cause extra string wear, even breakage. Stone and brick walls, curbs, and wood may wear string or blade rapidly.
- Do not allow spool cap to drag on ground or other surfaces.
- In long growth cut from the top down and do not exceed 300 mm high.
- Keep trimmer tilted toward the area being cut; this is the best cutting area.
- The trimmer cuts when passing the unit from the right to left. This will avoid throwing debris at the operator.
- Avoid trees and shrubs. Tree bark, wood moldings, siding, and fence posts can easily be damaged by the string.

Cutting line / line feeding

Your trimmer uses 1.65 mm diameter, Round nylon line. During use, the tips of the nylon lines will become frayed and worn and the special self feeding spool will automatically feed and trim a fresh length of line. Cutting line will wear faster and require more feeding if the cutting or edging is done along sidewalks or other abrasive surfaces or heavier weeds are being cut. The advanced automatic line feeding mechanism senses when more cutting line is needed and feeds and trims the correct length of line whenever it's required. Do not bump unit on ground in attempt to feed line or for any other purposes.

Clearing jams and tangled line (Figures P, Q, R)

Warning! Remove the battery from the trimmer before making any assembly, adjustments or changing accessories.

Such preventive safety measures reduce the risk of starting the appliance accidentally. From time to time, especially when cutting thick or stalky weeds, the line feeding hub may become clogged with sap or other material and the line will become jammed as a result. To clear the jam, follow the steps listed below.

- Remove the battery from the trimmer.
- Press the release tabs (23) on the line spool cap (24), as shown in Figure P and remove the cap by pulling it straight off.
- Pull the nylon line spool out and clear any broken line or cutting debris from the spool area.
- Place spool and line into spool cap with line "parked" in slots provided as shown in Figure O1.
- Insert the line end through the appropriate hole in the spool housing. Pull slack line through until it pulls out of the holding slots as shown in Figure O2.
- Press the spool down gently and rotate it until you feel it drop into place and then push to snap into place. (When in place, the spool will turn a few degrees left and right freely).
- Take care to keep the line from becoming trapped under the spool.
- Align the spool cap tabs with the slots on the spool housing.
- Snap the spool cap back on as shown in Figure R by depressing lugs and pressing into spool housing.

Note: Make sure that cover is fully positioned, listen for two audible clicks to ensure both lugs are correctly located. Power the appliance on. In a few seconds or less you'll hear the nylon line being cut automatically to the proper length.

Warning! To avoid appliance damage, if the cutting line protrudes beyond the trimming blade, cut it off so that it just reaches the blade.

Note: Other replacement parts (guards, spool caps, etc.) are available through BLACK+DECKER service centers. To find your local service location visit www.blackanddecker.com.

Warning! The use of any accessory not recommended by BLACK+DECKER for use with this appliance could be hazardous.

Replacing the spool

- Remove battery from appliance.
- Depress the tabs (23) and remove the spool cap (24) from the spool housing (11) (Figure S).
- Grasp empty spool with one hand and spool housing with other hand and pull spool out.
- If lever (25) (Figure S) in base of housing becomes dislodged, replace in correct position before inserting new spool into housing.
- Remove any dirt and grass from the spool and housing.
- Unfasten the end of the cutting line and guide the line into the eyelet (O2) Figure S.
- Take the new spool and push it onto the boss (26) (Figure S) in the housing.

Rotate the spool slightly until it is seated. The line should protrude approximately 136mm from the housing.
- Align the tabs on the spool cap with the slots in the housing.
- Push the cap onto the housing until it snaps securely into place.

Rewinding spool from bulk line

Bulk line is also available for purchase from your local retailer.
Note: Hand wound spools from bulk line are likely to become tangled more frequently than BLACK+DECKER factory wound spools.
For best results, factory wound spools are recommended. To install bulk line, follow the steps below:
- Remove battery from appliance.
- Remove the empty spool from the appliance as described in "Replacing the spool."
- Remove any remaining cutting line from the spool.
- Make a fold at the end of the cutting line at about 19mm (27). Feed the cutting line into one of the line anchoring slots (28) as shown in Figure T.
- Insert the 19mm end of the bulk line into the hole (29) in the spool adjacent to the slot as shown in Figure U. Make sure the line is pulled tight against the spool as shown in Figure U.
- Wind the cutting line onto the spool in the direction of the arrow on the spool. Make sure to wind the line on neatly and in layers. Do not crisscross (Figure V1).
- When the wound cutting line reaches the recesses (30), cut the line (Figure U).
- Fit the spool onto the appliance as described in "Replacing the spool".

Replacing string unit with resin blade unit. (Fig W1-W3)

- Locate Allen Key (31) in its storage area in (5a) located above Resin blade storage (13) on Auxilliary handle (5). as shown in Figure W1.
- Remove Spool cap (24) and remove spool (32) from spool housing (11).
- Unscrew the screw (33) counter clockwise, using the Allen Key (31) and remove from Motor unit. As shown in Figure W2.
- Locate the resin blade unit (12) onto the drive shaft in the motor unit and secure with screw (33) using the Allen Key (31).

Fitting resin blades to Resin blade unit (Fig. X1, X2, X3)

- Slip large diameter hole on resin blade (12a) over silver post (12b) on resin blade unit (12) as shown in Figure X1.
- Push down to align with cutout.
- Pull outwards until you hear/feel a 'click' as shown in Figure X2.
- Replace blades when they reduce in length (as shown in image X3) to less than 50mm.
- Always replace both blades at the same time.
- Always ensure that both cutting blades are properly mounted before starting work.
- Operating the trimmer with only one blade will reduce cutting performance and may damage the trimmer.

Replacing resin blade unit with string unit. (Fig W1-W3)

- Locate Allen Key (31) in its storage area in (5a) located above Resin blade storage (13) on Auxilliary handle (5). as shown in Figure W1.
- Insert tool into hole in resin blade unit (12) and find head of screw. Unscrew screw (33).
- When screw (33) is loose, remove from head housing along with head and set aside.
- Remove cap from string spool housing.
- Locate spool driving feature on shaft. Housing should slip into place.
- Place screw in center column of spool housing.
- Tighten screw.
- Replace spool housing cap.

Optional Replacement Parts

Replacement blades: **BZORB20**
Blade to String conversion kit: **BZOB2S1**
String to blade conversion kit: **BZOS2B1**

Maintenance

Your BLACK+DECKER corded/cordless appliance/tool has been designed to operate over a long period of time with a minimum of maintenance.
Continuous satisfactory operation depends upon proper tool/appliance care and regular cleaning.
Your charger does not require any maintenance apart from regular cleaning.
Warning! Before performing any maintenance on corded/cordless power tools:
- Switch off and unplug the appliance/tool.
- Or switch off and remove the battery from the appliance/tool if the appliance/tool has a separate battery pack.
- Or run the battery down completely if it is integral and then switch off.
- Unplug the charger before cleaning it. Your charger does not require any maintenance apart from regular cleaning.
- Regularly clean the ventilation slots in your tool/appliance and charger using a soft brush or dry cloth.
- Regularly clean the motor housing using a damp cloth. Do not use any abrasive or solvent-based cleaner.
- Regularly clean cutting line, spool and/or blade using a soft brush or dry cloth.
- Regularly use a blunt scraper to remove grass and dirt from the underneath of the guard.

Troubleshooting

Problem	Solution
Appliance runs slowly.	Remove battery from trimmer. Check that spool housing or resin blade head can rotate freely. Carefully clean it if necessary. Check that the cutting line does not protrude more than approximately 122mm from the spool. If it does, cut it off so that it just reaches the line trimming blade
Automatic line feed does not feed line.	More line is fed when the line shortens to approximately 76mm. To determine if the line is not feeding, let line wear past this point. Keep the tabs depressed and remove the spoolcap with the spool from the spool housing in the trimmer head. Ensure that the line is not crisscrossed on the spool as detailed in (Fig.T). If it is unwind the cutting line and rewind it neatly. Inspect tracks at the bottom of spool for damage. If damaged, replace spool. Pull the cutting line until it protrudes approximately 122mm from the spool. If insufficient cutting line is left on the spool, install a new spool of cutting line. Align the tabs on the spool cap with the cut outs in the housing. Push the spool cap onto the housing until it snaps securely into place. If the cutting line protrudes beyond the trimming blade, cut it off so that it just reaches the blade. If the automatic line feed still does not work or the spool is jammed, try the following suggestions: Carefully clean the spool and housing. Make sure you are using correct line size and diameter (2.00 mm) - smaller and larger line sizes will affect the functionality of the auto feed system. Remove the spool and check if the lever in the spool housing can move freely. Remove the spool and unwind the cutting line, then wind it on neatly again. Replace the spool into the housing.
Overfeeding	Ensure you are cutting with the tip of the line 177mm from the spool. Use the edge guide if needed to ensure proper space is maintained. Ensure you are not exceeding a 10º angle as shown in (Fig.M). Avoid contact of the line with hard surfaces such as brick, concrete, wood etc. This will prevent excessive wear and/or overfeed of line. Cut with the tip of the line
Line unravels when cap or spool is removed	Make sure to park the lines in holding slots (Figure R) before removing.

Protecting the environment



Separate collection. Products and batteries marked with this symbol must not be disposed of with normal household waste.

Products and batteries contain materials that can be recovered or recycled, reducing demand for raw materials. Please recycle electrical products and batteries according to local provisions.
Further information is available at www.2helpU.com

Technical data

		BCST918, BCSTR918 Type 1
Input Voltage	V_{DC}	18V
No-Load Speed	min^{-1}	6000/7400
Weight	kg	2.2Kg

Battery		**BL2018**	**BDL2018S**
Voltage	V_{dc}	18V	18V
Capacity	Ah	2.0	2.0
Type		Li-Ion	Li-Ion

Charger		**905902**(typ.1)**
Input Voltage	V_{AC}	100 - 240
Output Voltage	V_{DC}	8 - 20
Current	mA	**Input:** 400

Hand/arm weighted vibration value according to EN 50636-2-91:

< 2,5 m/s^2, uncertainty (K) = 1.5 m/s^2.

Emission sound pressure level: L_{PA}: 78 dB(A); K=3.0 dB(A);

Measured sound power level: L_{WA}: 93 dB(A); K=2.5 dB(A);

EC declaration of conformity

MACHINERY DIRECTIVE
OUTDOOR NOISE DIRECTIVE

CE

BCST918, BCSTR918 Cordless String Trimmer
Black & Decker declares that these products described under "technical data" are in compliance with:
2006/42/EC, EN 60335-1:2012 + A11:2014 + A13:2017 + A1:2019 + A14:2019 + A2:2019 + A15:2021; EN50636-2-91:2014
2000/14/EC, Lawn trimmer (Category Annex I, item 33), L < 50cm, Annex VI,
DEKRA Testing and Certification GmbH,
Handwerkstraße 15, 70565 Stuttgart
Location Certification Body,
Dinnendahlstr. 9, 44809 Bochum Germany
Notified Body number: 0158
L_{WA} (measured sound power) 93 dB(A),
L_{WA} (guaranteed sound power) 96 dB(A).
These products also comply with Directive 2014/30/EU and 2011/65/EU. For more information, please contact Black & Decker at the following address or refer to the back of the manual.

ENGLISH **(Original instructions)**

The undersigned is responsible for compilation of the technical file and makes this declaration on behalf of Black & Decker.



Patrick Diepenbach
General Manager, Benelux
Black and Decker,
Richard-Klinger-Strasse 11,
65510 Idstein, Germany
19/02/2024

Guarantee

Black & Decker is confident of the quality of its products and offers consumers a 24 month guarantee from the date of purchase. This guarantee is in addition to and in no way prejudices your statutory rights. The guarantee is valid within the territories of the Member States of the European Union and the European Free Trade Area and the United kingdom.

To claim on the guarantee, the claim must be in accordance with Black&Decker Terms and Conditions and you will need to submit proof of purchase to the seller or an authorised repair agent. Terms and conditions of the Black&Decker 2 year guarantee and the location of your nearest authorised repair agent can be obtained on the Internet at www.2helpU.com, or by contacting your local Black & Decker office at the address indicated in this manual.

Please visit our website www.blackanddecker.eu to register your new Black & Decker product and receive updates on new products and special offers.

Australia & New Zealand www.blackanddecker.com.au www.blackanddecker.co.nz	Stanley Black & Decker 810 Whitehorse Road Box Hill VIC 3128, Australia	Tel. Tel.	1800 338 002 (Aus) 0800 339 258 (NZ)
United Kingdom & **Republic Of Ireland** www.blackanddecker.eu emeaservice@sbdinc.com	Black & Decker Meadowfield Avenue,Spennymoor, DL16 6YJ, England	Tel.	01753 511234