EN

BLACK+ DECKER™

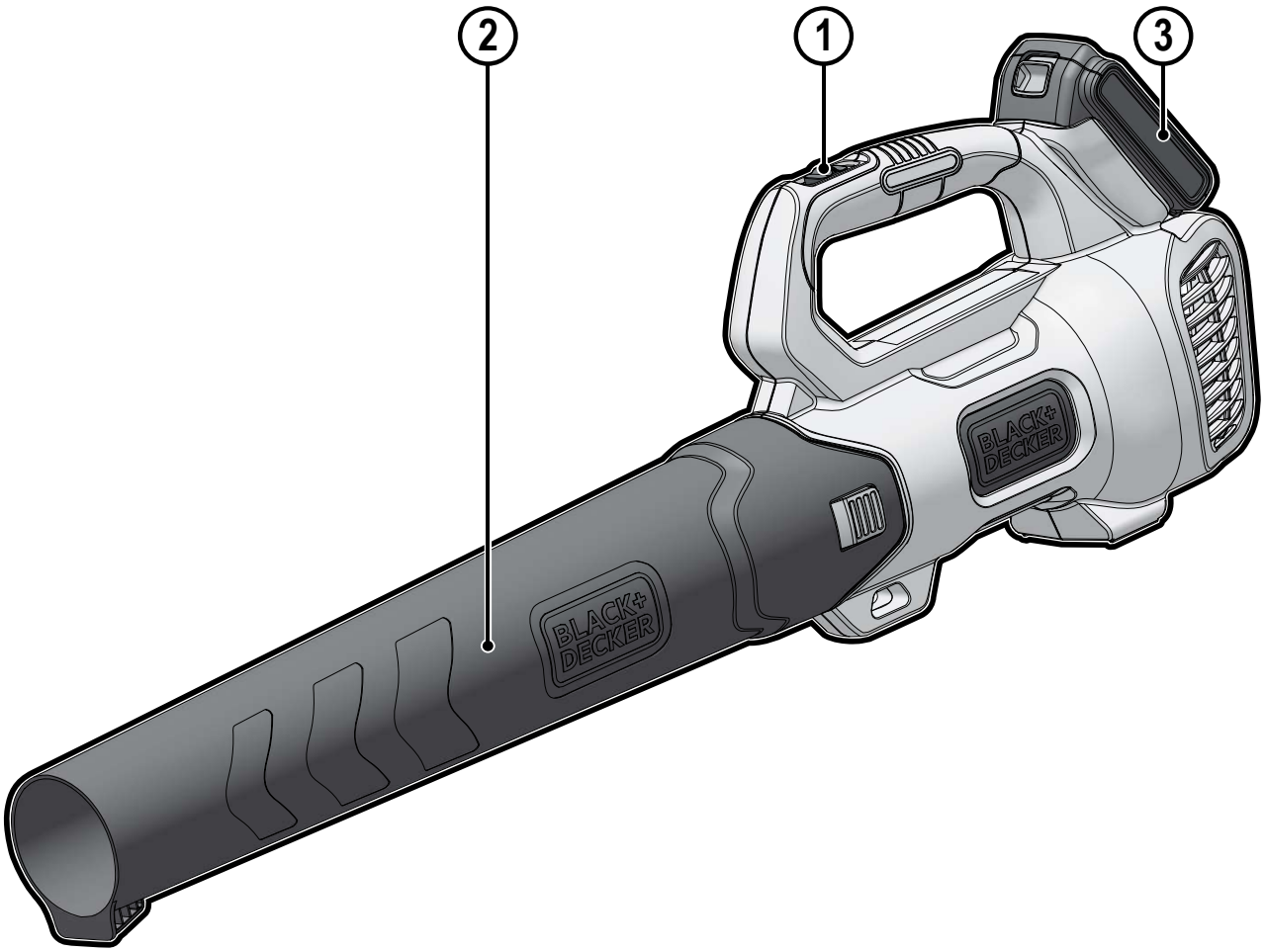

BCBL200 L
BCBL200 L25
BCBL200 B

www.blackanddecker.co.uk

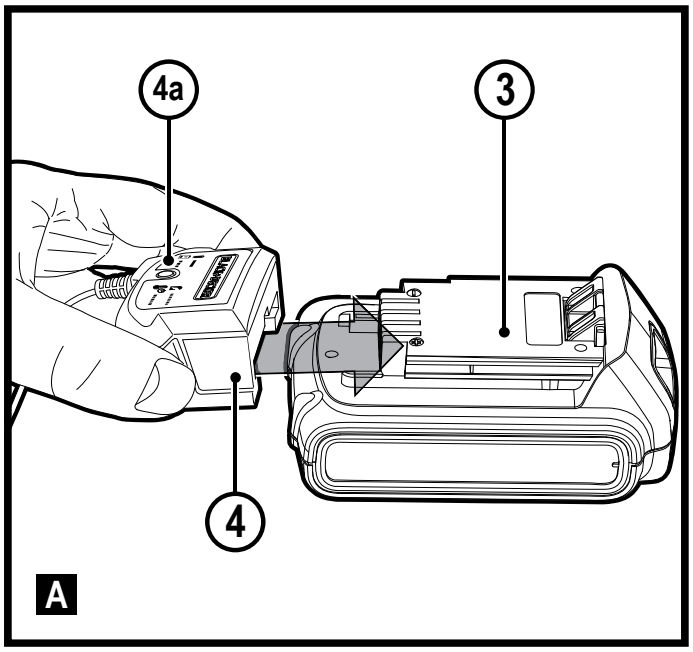
4a
3
4
A

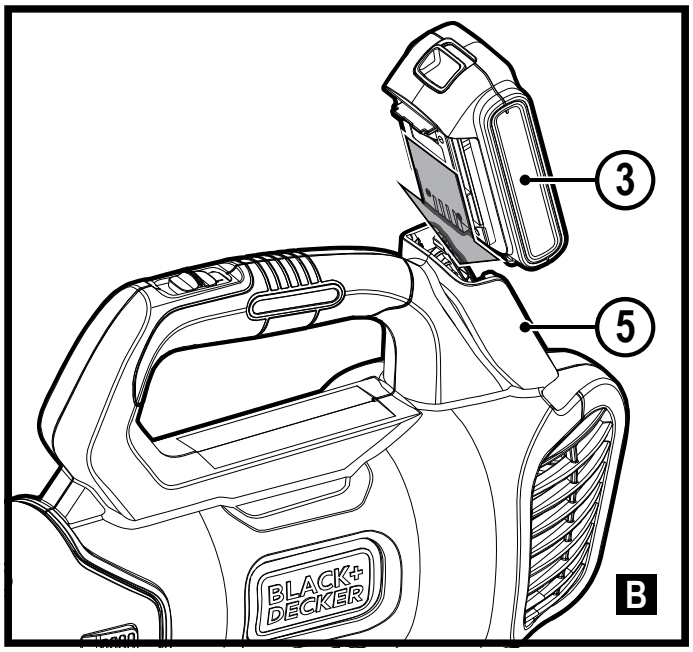
3
5
BLACK+ DECKER
B

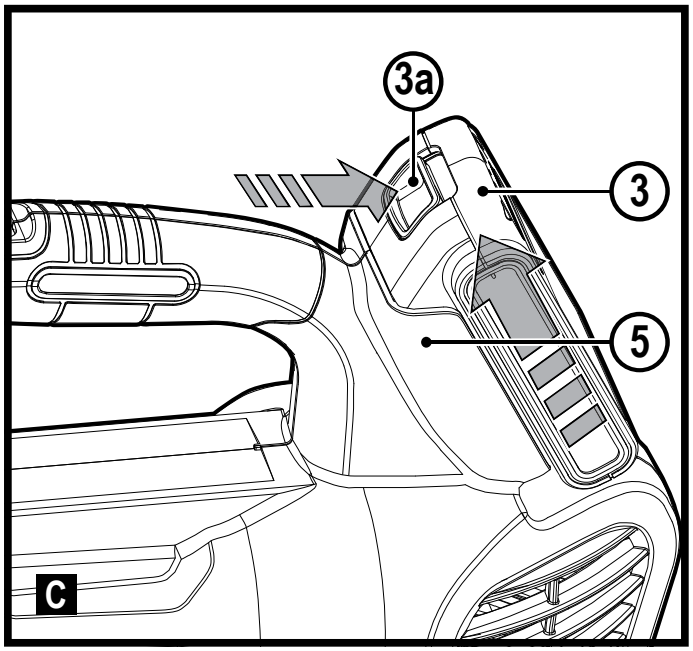
3a
3
5
C

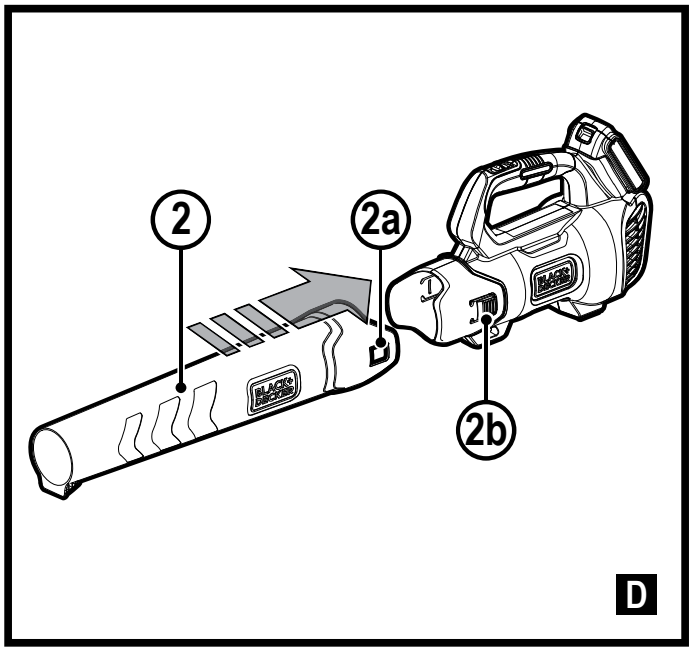
2
2a
2b
D

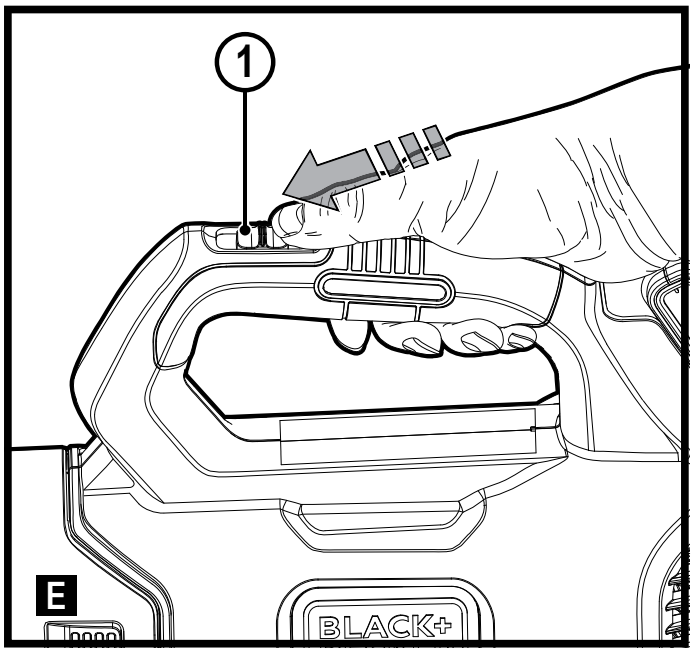
1
E

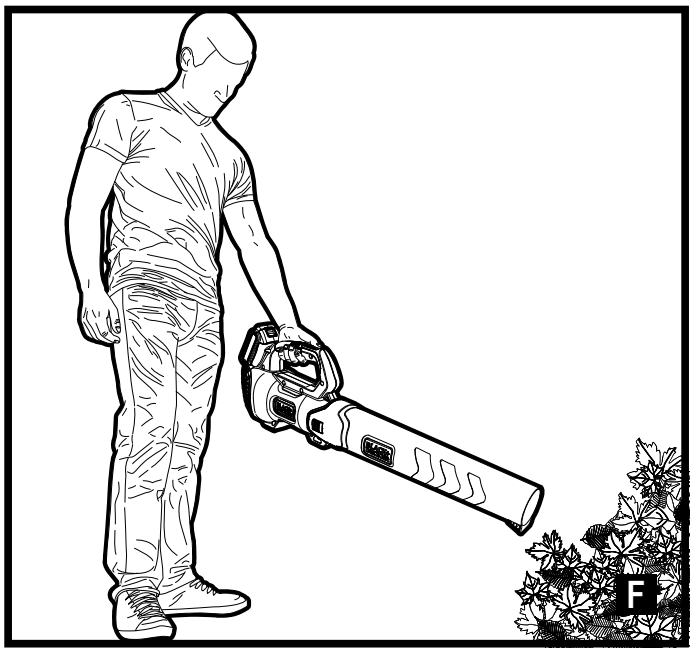
F

Intended use

Your BLACK+DECKER BCBL200 L, BCBL200 L25 and BCBL200 B blowers have been designed for leaf clearing. These appliances are intended for consumer use only.

Safety instructions

Warning! When using mains-powered/ cordless appliances, basic safety precautions, including the following, should always be followed to reduce the risk of fire, electric shock, personal injury and material damage.

- Read all of this manual carefully before operating the appliance.
- The intended use is described in this manual. The use of any accessory or attachment or the performance of any operation with this appliance other than those recommended in this instruction manual may present a risk of personal injury.
- Retain this manual for future reference.

Using your appliance

Always take care when using the appliance.

- Always use safety glasses or goggles.
- Never allow children, persons with reduced physical, sensory or mental capabilities or lack of experience and knowledge or people unfamiliar with these instructions to use the machine, local regulations may restrict the age of the operator. Never operate the machine while people, especially children, or pets are nearby.
- Do not allow children or animals to come near the work area or to touch the appliance or power supply cord.
- Close supervision is necessary when the appliance is used near children.
- This appliance is not intended for use by young or infirm persons without supervision.
- This appliance is not to be used as a toy.
- Only use the appliance in daylight or good artificial light.
- Use in a dry location only. Do not allow the appliance to become wet.
- Avoid using the appliance in bad weather conditions, especially when there is a risk of lightning.
- Do not immerse the appliance in water.
- Do not open the body casing. There are not user-serviceable parts inside.
- Do not operate the appliance in explosive atmospheres, such as in the presence of flammable liquids, gases or dust.
- The appliance is only to be used with the power supply unit provided with the appliance.

Residual risks.

Additional residual risks may arise when using the tool which may not be included in the enclosed safety warnings.
These risks can arise from misuse, prolonged use etc.
Even with the application of the relevant safety regulations and the implementation of safety devices, certain residual risks can not be avoided.

These include:

- Injuries caused by touching any rotating/moving parts.
- Injuries caused when changing any parts, blades or accessories.
- Injuries caused by prolonged use of a tool. When using any tool for prolonged periods ensure you take regular breaks.
- Impairment of hearing.
- Health hazards caused by breathing dust developed when using your tool (example:- working with wood, especially oak, beech and MDF.)

After use

- When not in use, the appliance should be stored in a dry, well ventilated place out of reach of children.
- Children should not have access to stored appliances.
- When the appliance is stored or transported in a vehicle it should be placed in the boot or restrained to prevent movement following sudden changes in speed or direction.

Inspection and repairs

- Before use, check the appliance for damaged or defective parts. Check for breakage of parts and any other conditions that may affect its operation.
- Do not use the appliance if any part is damaged or defective.
- Have any damaged or defective parts repaired or replaced by an authorised repair agent.
- Never attempt to remove or replace any parts other than those specified in this manual.

Additional safety instructions for blowers

The intended use is described in this manual. The use of any accessory or attachment or performance of any operation with this appliance other than those recommended in this instruction manual can present a risk of personal injury and/or damage to property.

- To protect your feet and legs while operating the appliance, always wear heavy duty footwear and long trousers.
- Always switch off your product, allow the fan to stop and remove the battery when:
- You leave your product unattended.
  - Clearing a blockage.
  - Checking, adjusting, cleaning or working on your product.
  - If the appliance starts to vibrate abnormally.
- Do not place the inlet or outlet of the vacuum near eyes or ears when operating. Never blow debris in the direction of bystanders.
- Do not use in the rain or leave outdoors while it is raining.
- Do not cross gravel paths or roads whilst your product is switched. Walk, never run.
- Do not place your unit down on gravel while it is switched on.
- Always be sure of your footing, particularly on slopes.

Do not overreach and keep your balance at all times.

- Do not place any objects into the openings. Never use if the openings are blocked - keep free of hair, lint, dust and anything that may reduce the airflow.

Vibration

The declared vibration emission values stated in the technical data and the declaration of conformity have been measured in accordance with a standard test method provided by EN50636 and may be used for comparing one tool with another. The declared vibration emission value may also be used in a preliminary assessment of exposure.

Warning! The vibration emission value during actual use of the power tool can differ from the declared value depending on the ways in which the tool is used. The vibration level may increase above the level stated.

When assessing vibration exposure to determine safety measures required by 2002/44/EC to protect persons regularly using power tools in employment, an estimation of vibration exposure should consider, the actual conditions of use and the way the tool is used, including taking account of all parts of the operating cycle such as the times when the tool is switched off and when it is running idle in addition to the trigger time.

Warning! Always use your product in the manner outlined in this manual.

Your product is designed to be used in an upright mode and if it is used in any other way it may result in injury. Never run your product whilst lying on it's side or upside down.

- The operator or user is responsible for accidents or hazards occurring to other people or their property.
- Do not use solvents or cleaning fluids to clean your product. Use a blunt scraper to remove grass and dirt.
- Check the collection bag frequently for wear or deterioration.
- Replacement fans are available from a Black & Decker service agent. Use on Black & Decker recommended spare parts and accessories.
- Keep all nuts bolts and screws tight to make sure that the appliance is in a safe working condition.

Safety of others

- This appliance is not intended for use by persons (including children) with reduced physical, sensory or mental capabilities, or lack of experience and knowledge, unless they have been given supervision or instruction concerning use of the appliance by a person responsible for their safety.
- Children should be supervised to ensure that they do not play with the appliance.

Additional safety instructions for batteries and chargers

Batteries

- Never attempt to open for any reason.
- Do not expose the battery to water.
- Do not store in locations where the temperature may exceed 40 °C.
- Charge only at ambient temperatures between 10 °C and 40 °C.
- Charge only using the charger provided with the tool.
- When disposing of batteries, follow the instructions given in the section "Protecting the environment".

Chargers

- Use your BLACK+DECKER charger only to charge the battery in the tool with which it was supplied. Other batteries could burst, causing personal injury and damage.
- Never attempt to charge non-rechargeable batteries.
- Have defective cords replaced immediately.
- Do not expose the charger to water.
- Do not open the charger.
- Do not probe the charger.



The charger is intended for indoor use only.



Read the instruction manual before use.

Electrical safety



Your charger is double insulated; therefore no earth wire is required. Always check that the mains voltage corresponds to the voltage on the rating plate. Never attempt to replace the charger unit with a regular mains plug.

- If the supply cord is damaged, it must be replaced by the manufacturer or an authorised BLACK+DECKER Service Centre in order to avoid a hazard.

Labels on appliance

The following warning symbols are found on the appliance along with the date code:



Read the manual prior to operation.





Wear safety glasses or goggles when operating this appliance.
Wear suitable ear protectors when operating this appliance.

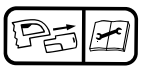

Always remove the battery from the appliance before performing any cleaning or maintenance .



Beware of flying objects. Keep bystanders away from the cutting area.



Do not expose the appliance to rain or high humidity.



Directive 2000/14/EC guaranteed sound power.

Features

This appliance includes some or all of the following features.

1. On / Off Switch
2. Blower Tube
3. Battery

Charging a battery (BCBL200 L and BCBL200 L25 units only) (fig. A)

BLACK+DECKER chargers are designed to charge BLACK+DECKER battery packs.

- Plug the charger (4) into an appropriate outlet before inserting a battery pack (3).
- Insert the battery pack (3) into the charger, making sure the battery pack is fully seated in the battery slots (Figure A).

The LED (4a) will flash indicating that the battery is being charged.

The completion of charge is indicated by the LED remaining on continuously. The pack is fully charged and may be used at this time or left in the charger.

- Recharge discharged batteries as soon as possible after use or battery life may be greatly diminished.
  For longest battery life, do not discharge batteries fully.
  It is recommended that the batteries be recharged after each use.

Charger diagnostics

This charger is designed to detect certain problems that can arise with the battery packs or the power source. Problems are indicated by one LED flashing in different patterns.

Bad battery

The charger can detect a weak or damaged battery. The LED flashes in the pattern indicated on the label. If you see this bad battery blink pattern, do not continue to charge the battery. Return it to a service center or a collection site for ecycling.

Hot/cold pack delay

When the charger detects a battery that is excessively hot or excessively cold, it automatically starts a Hot/Cold Pack Delay, suspending charging until the battery has normalized. After this happens, the charger automatically switches to the Pack Charging mode. This feature ensures maximum battery life. The light flashes in the pattern indicated on the label.

Leaving the battery in the charger

The charger and battery pack can be left connected with the LED glowing indefinitely. The charger will keep the battery pack fresh and fully charged.
This charger features an automatic tune-up mode which equals or balances the individual cells in the battery pack to allow it to function at peak capacity.
Battery packs should be tuned up weekly or whenever the battery no longer delivers the same amount of work. To use the automatic tune-up mode, place the battery pack in the charger and leave it for at least 8 hours.

Important charging notes

- Longest life and best performance can be obtained if the battery pack is charged when the air temperature is between 18 ° – 24 °C. DO NOT charge the battery pack in an air temperature below +4.5 °C), or above +40 °C. This is important and will prevent serious damage to the battery pack.
- The charger and battery pack may become warm to the touch while charging. This is a normal condition, and does not indicate a problem.
  To facilitate the cooling of the battery pack after use, avoid placing the charger or battery pack in a warm environment such as in a metal shed or an uninsulated trailer.
- If the battery pack does not charge properly:
  - Check operation of receptacle by plugging in a lamp or other appliance;
  - Check to see if receptacle is connected to a light switch which turns power off when you turn out the lights;
  - Move the charger and battery pack to a location where the surrounding air temperature is approximately 18 ° – 24 °C;
  - If charging problems persist, take the tool, battery pack and charger to your local service center.
  - The battery pack should be recharged when it fails to produce sufficient power on jobs which were easily done previously. DO NOT CONTINUE to use under these conditions. Follow the charging procedure. You may also charge a partially used pack whenever you desire with no adverse effect on the battery pack.
- Foreign materials of a conductive nature such as, but not limited to, grinding dust, metal chips, steel wool, aluminum foil, or any buildup of metallic particles should be kept away from charger cavities. Unplug the charger before attempting to clean.
- Do not freeze or immerse the charger in water or any other liquid.

To install battery pack (BCBL200 L and BCBL200 L25 units only) (fig. B)

- Insert battery pack (3) into tool until an audible click is heard as shown in Figure B. Make sure battery pack is fully seated and fully latched into position.

To remove battery pack (fig. C)

- Depress the battery release button (3a) in the battery pack (3) and pull battery pack out of tool assembly (5) as shown in Figure C.

To fit the blower tube (fig. D)

- Attach the blower tube (2) to the blower main body by placing the tabs (2b) into the recesses (2a). To remove the blower tube, depress the tabs (2a) and pull apart.

Switching on and off

Warning! Use both hands to grip the product firmly when switching on.

Warning! Do not point unit discharge at self or bystanders.

- To switch the sweeper on, slide the on/off switch forward as shown E.
- To switch the sweeper off, slide the on/off switch back.

Operation

Warning! Always wear safety glasses. Wear a filter mask if the operation is dusty. Use of gloves, long pants and substantial footwear is recommended. Keep long hair and loose clothing away from openings and moving parts. THIS SWEEPER IS FOR HOUSEHOLD USE ONLY.

- Hold the sweeper with one hand as shown in Figure F and sweep from side to side with the nozzle several inches above the ground. Slowly advance keeping the accumulated pile of debris in front of you.

Troubleshooting

Problem	Possible cause	Possible solution
Unit will not start.	Battery not installed properly.	Check battery installation.
	Battery not charged.	Check battery charging requirements.
Battery will not charge.	Battery not inserted into charger.	Insert battery into charger until green LED appears.
	Charger not plugged in.	Plug charger into a working outlet. Refer to “Important Charging Notes” for more details.
		Check current at receptacle by plugging in a lamp or other appliance.
		Check to see if receptacle is connected to a light switch which turns power off when you turn out the lights.
	Surrounding air temperature too hot or too cold.	Move charger and tool to a surrounding air temperature of above 40 degree F (4.5°C) or below 105 degree F (+40.5°C).

Protecting the environment



Separate collection. Products and batteries marked with this symbol must not be disposed of with normal household waste.

Products and batteries contain materials that can be recovered or recycled reducing the demand for raw materials. Please recycle electrical products and batteries according to local provisions.

Technical data

		BCBL200 L	BCBL200 L25	BCBL200 B
Input Voltage	V_{DC}	18	18	18
No-Load Speed	/min	19500	19500	19500
Weight	kg	2.35	2.61	1.79
Battery		**90617054**	**N637662**	**Bare unit, not supplied**
Voltage	V_{DC}	18	18	
Capacity	Ah	2.0	2.5	
Charger		**90634972**	**90606845-01**	**Bare unit, not supplied**

Hand/arm weighted vibration value according to EN 50636-2-100:

= < 2.5 m/s^2, uncertainty (K) = 1,5 m/s^2.

L_{PA} (sound pressure) 81.5 dB(A)

uncertainty (K) = 0.7 dB(A)

EC declaration of conformity

MACHINERY DIRECTIVE
OUTDOOR NOISE DIRECTIVE

CE

BCBL200 L, BCBL200 L25, BCBL200 B blower

Black & Decker declares that these products described under "technical data" are in compliance with:
2006/42/EC, EN 60335-1: 2012+A11:2014;
EN 50636-2-100:2014

2000/14/EC, Blower, Annex V
DEKRA Certification B.V., Meander 1051/P.O. Box 5185
6825MJ ARNEM / 6802ED ARNHEM Netherlands Notified Body ID No.: 0344
Level of accoustic power according to 2000/14/EC (Article 13, Annex III):
L_{WA} (measured sound power) 90.5 dB(A)
Uncertainty = 0,8 dB(A)
L_{WA} (guaranteed sound power) 91 dB(A)

These products also comply with Directive 2014/30/EU, 2011/65/EU.

For more information, please contact Black & Decker at the following address or refer to the back of the manual.
The undersigned is responsible for compilation of the technical file and makes this declaration on behalf of Black & Decker.



R. Laverick
Director of Engineering
Black & Decker Europe, 210 Bath Road, Slough,
Berkshire, SL1 3YD
United Kingdom
21/08/2018

Guarantee

Black & Decker is confident of the quality of its products and offers consumers a 24 month guarantee from the date of purchase. This guarantee is in addition to and in no way prejudices your statutory rights. The guarantee is valid within the territories of the Member States of the European Union and the European Free Trade Area.

To claim on the guarantee, the claim must be in accordance with Black & Decker Terms and Conditions and you will need to submit proof of purchase to the seller or an authorised repair agent. Terms and conditions of the Black & Decker 2 year guarantee and the location of your nearest authorised repair agent can be obtained on the Internet at www.2helpU.com, or by contacting your local Black & Decker office at the address indicated in this manual.

Please visit our website www.blackanddecker.co.uk to register your new Black & Decker product and receive updates on new products and special offers.

Australia	Black & Decker (Australia) Pty. Ltd. 20 Fletcher Road, Mooroolbark, Victoria, 3138	Tel. Fax	03-8720 5100 03-9727 5940
New Zealand	Black & Decker 5 Te Apunga Place Mt Wellington Aukland 1060	Tel. Fax	+64 9 259 1133 +64 9 259 1122
United Kingdom & **Republic Of Ireland** www.blackanddecker.co.uk emeaservice@sbdinc.com	Black & Decker 210 Bath Road Slough, Berkshire SL1 3YD	Tel. Fax	01753 511234 01753 512365