ENGLISH (Original Instructions)

INSTRUCTION MANUAL

Cordless Hammer Driver Drill

DHP448
DHP458

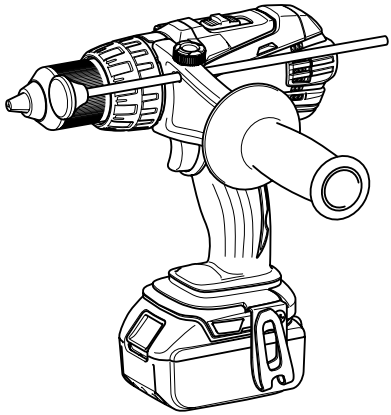

012710

IMPORTANT: Read Before Using.

ENGLISH (Original instructions)

SPECIFICATIONS

Model		DHP448	DHP458
Capacities	Drilling into concrete	14 mm	16 mm
	Drilling into steel	13 mm	13 mm
	Drilling into wood	65 mm	76 mm
	Fastening wood screw	8 mm x 75 mm	10 mm x 90 mm
	Fastening machine screw	6 mm	
No load speed	High (2)	0 - 1,800 min^{-1}	0 - 2,000 min^{-1}
	Low (1)	0 - 350 min^{-1}	0 - 400 min^{-1}
Blows per minute	High (2)	0 - 27,000 min^{-1}	0 - 30,000 min^{-1}
	Low (1)	0 - 5,200 min^{-1}	0 - 6,000 min^{-1}
Overall length		225 mm	
Net weight		2.2 kg	2.3 kg
Rated voltage		D.C. 14.4 V	D.C. 18 V

• Due to our continuing program of research and development, the specifications herein are subject to change without notice.
• Specifications and battery cartridge may differ from country to country.
• Weight, with battery cartridge, according to EPTA-Procedure 01/2003

END004-4

Symbols

The following show the symbols used for the equipment. Be sure that you understand their meaning before use.

· Read instruction manual.

· Only for EU countries
Do not dispose of electric equipment or battery pack together with household waste material!
In observance of European Directive 2002/96/EC on waste electric and electronic equipment, 2006/66/EC on batteries and accumulators and waste batteries and accumulators and their implementation in accordance with national laws, electric equipment and battery pack that have reached the end of their life must be collected separately and returned to an environmentally compatible recycling facility.

ENE079-1

Intended use

The tool is intended for impact drilling in brick, concrete and stone. It is also suitable for screw driving and drilling without impact in wood, metal, ceramic and plastic.

ENG905-1

Noise

The typical A-weighted noise level determined according to EN60745:

Model DHP448

Sound pressure level (L_{pA}) : 82 dB (A)
Sound power level (L_{WA}) : 93 dB (A)
Uncertainty (K) : 3 dB (A)

Model DHP458

Sound pressure level (L_{pA}) : 84 dB (A)
Sound power level (L_{WA}) : 95 dB (A)
Uncertainty (K) : 3 dB (A)

Wear ear protection

ENG900-1

Vibration

The vibration total value (tri-axial vector sum) determined according to EN60745:

Model DHP448

Work mode: impact drilling into concrete
Vibration emission ($a_{h,ID}$) : 8.5 m/s^2
Uncertainty (K) : 1.5 m/s^2

Work mode: drilling into metal
Vibration emission ($a_{h,D}$) : 2.5 m/s^2 or less
Uncertainty (K) : 1.5 m/s^2

Model DHP458

Work mode: impact drilling into concrete
Vibration emission ($a_{h,ID}$) : 9.5 m/s^2
Uncertainty (K) : 1.5 m/s^2

Work mode: drilling into metal
Vibration emission ($a_{h,D}$) : 2.5 m/s^2 or less
Uncertainty (K) : 1.5 m/s^2

ENG901-1

- The declared vibration emission value has been measured in accordance with the standard test method and may be used for comparing one tool with another.
- The declared vibration emission value may also be used in a preliminary assessment of exposure.

⚠**WARNING:**

- The vibration emission during actual use of the power tool can differ from the declared emission value depending on the ways in which the tool is used.
- Be sure to identify safety measures to protect the operator that are based on an estimation of exposure in the actual conditions of use (taking account of all parts of the operating cycle such as the times when the tool is switched off and when it is running idle in addition to the trigger time).

ENH101-17

For European countries only

EC Declaration of Conformity

Makita declares that the following Machine(s):
Designation of Machine:
Cordless Hammer Driver Drill
Model No./ Type: DHP448,DHP458
Conforms to the following European Directives:
2006/42/EC
They are manufactured in accordance with the following standard or standardized documents:
EN60745
The technical file in accordance with 2006/42/EC is available from:
Makita, Jan-Baptist Vinkstraat 2, 3070, Belgium

31.12.2013

000331

Yasushi Fukaya
Director
Makita, Jan-Baptist Vinkstraat 2, 3070, Belgium

GEA006-2

General Power Tool Safety Warnings

⚠ **WARNING Read all safety warnings and all instructions.** Failure to follow the warnings and instructions may result in electric shock, fire and/or serious injury.

Save all warnings and instructions for future reference.

The term "power tool" in the warnings refers to your mains-operated (corded) power tool or battery-operated (cordless) power tool.

Work area safety

1. **Keep work area clean and well lit.** Cluttered or dark areas invite accidents.
2. **Do not operate power tools in explosive atmospheres, such as in the presence of flammable liquids, gases or dust.** Power tools create sparks which may ignite the dust or fumes.
3. **Keep children and bystanders away while operating a power tool.** Distractions can cause you to lose control.

Electrical safety

4. **Power tool plugs must match the outlet. Never modify the plug in any way. Do not use any adapter plugs with earthed (grounded) power tools.** Unmodified plugs and matching outlets will reduce risk of electric shock.
5. **Avoid body contact with earthed or grounded surfaces such as pipes, radiators, ranges and refrigerators.** There is an increased risk of electric shock if your body is earthed or grounded.
6. **Do not expose power tools to rain or wet conditions.** Water entering a power tool will increase the risk of electric shock.
7. **Do not abuse the cord. Never use the cord for carrying, pulling or unplugging the power tool. Keep cord away from heat, oil, sharp edges or moving parts.** Damaged or entangled cords increase the risk of electric shock.
8. **When operating a power tool outdoors, use an extension cord suitable for outdoor use.** Use of a cord suitable for outdoor use reduces the risk of electric shock.
9. **If operating a power tool in a damp location is unavoidable, use a ground fault circuit interrupter (GFCI) protected supply.** Use of an GFCI reduces the risk of electric shock.

Personal safety

10. **Stay alert, watch what you are doing and use common sense when operating a power tool. Do not use a power tool while you are tired or under the influence of drugs, alcohol or**

medication. A moment of inattention while operating power tools may result in serious personal injury.

11. **Use personal protective equipment. Always wear eye protection.** Protective equipment such as dust mask, non-skid safety shoes, hard hat, or hearing protection used for appropriate conditions will reduce personal injuries.
12. **Prevent unintentional starting. Ensure the switch is in the off-position before connecting to power source and/or battery pack, picking up or carrying the tool.** Carrying power tools with your finger on the switch or energising power tools that have the switch on invites accidents.
13. **Remove any adjusting key or wrench before turning the power tool on.** A wrench or a key left attached to a rotating part of the power tool may result in personal injury.
14. **Do not overreach. Keep proper footing and balance at all times.** This enables better control of the power tool in unexpected situations.
15. **Dress properly. Do not wear loose clothing or jewellery. Keep your hair, clothing, and gloves away from moving parts.** Loose clothes, jewellery or long hair can be caught in moving parts.
16. **If devices are provided for the connection of dust extraction and collection facilities, ensure these are connected and properly used.** Use of dust collection can reduce dust-related hazards.

Power tool use and care

17. **Do not force the power tool. Use the correct power tool for your application.** The correct power tool will do the job better and safer at the rate for which it was designed.
18. **Do not use the power tool if the switch does not turn it on and off.** Any power tool that cannot be controlled with the switch is dangerous and must be repaired.
19. **Disconnect the plug from the power source and/or the battery pack from the power tool before making any adjustments, changing accessories, or storing power tools.** Such preventive safety measures reduce the risk of starting the power tool accidentally.
20. **Store idle power tools out of the reach of children and do not allow persons unfamiliar with the power tool or these instructions to operate the power tool.** Power tools are dangerous in the hands of untrained users.
21. **Maintain power tools. Check for misalignment or binding of moving parts, breakage of parts and any other condition that may affect the power tool's operation. If damaged, have the power tool repaired before use.** Many accidents are caused by poorly maintained power tools.
22. **Keep cutting tools sharp and clean.** Properly maintained cutting tools with sharp cutting edges are less likely to bind and are easier to control.
23. **Use the power tool, accessories and tool bits etc. in accordance with these instructions, taking into account the working conditions and the work to be performed.** Use of the power tool for operations different from those intended could result in a hazardous situation.

Battery tool use and care

24. **Recharge only with the charger specified by the manufacturer.** A charger that is suitable for one type of battery pack may create a risk of fire when used with another battery pack.
25. **Use power tools only with specifically designated battery packs.** Use of any other battery packs may create a risk of injury and fire.
26. **When battery pack is not in use, keep it away from other metal objects, like paper clips, coins, keys, nails, screws or other small metal objects, that can make a connection from one terminal to another.** Shorting the battery terminals together may cause burns or a fire.
27. **Under abusive conditions, liquid may be ejected from the battery; avoid contact. If contact accidentally occurs, flush with water. If liquid contacts eyes, additionally seek medical help.** Liquid ejected from the battery may cause irritation or burns.

Service

28. **Have your power tool serviced by a qualified repair person using only identical replacement parts.** This will ensure that the safety of the power tool is maintained.
29. **Follow instruction for lubricating and changing accessories.**
30. **Keep handles dry, clean and free from oil and grease.**

GEB056-4

CORDLESS HAMMER DRIVER DRILL SAFETY WARNINGS

1. **Wear ear protectors with impact drilling.** Exposure to noise can cause hearing loss.
2. **Use auxiliary handle(s), if supplied with the tool.** Loss of control can cause personal injury.
3. **Hold power tool by insulated gripping surfaces, when performing an operation where the cutting accessory may contact hidden wiring.** Cutting accessory contacting a "live" wire may make exposed metal parts of the power tool "live" and could give the operator an electric shock.

4. **Hold power tool by insulated gripping surfaces, when performing an operation where the fastener may contact hidden wiring.** Fasteners contacting a "live" wire may make exposed metal parts of the power tool "live" and could give the operator an electric shock.
5. **Always be sure you have a firm footing. Be sure no one is below when using the tool in high locations.**
6. **Hold the tool firmly.**
7. **Keep hands away from rotating parts.**
8. **Do not leave the tool running. Operate the tool only when hand-held.**
9. **Do not touch the bit or the workpiece immediately after operation; they may be extremely hot and could burn your skin.**
10. **Some material contains chemicals which may be toxic. Take caution to prevent dust inhalation and skin contact. Follow material supplier safety data.**

SAVE THESE INSTRUCTIONS.

⚠WARNING:

DO NOT let comfort or familiarity with product (gained from repeated use) replace strict adherence to safety rules for the subject product. MISUSE or failure to follow the safety rules stated in this instruction manual may cause serious personal injury.

ENC007-7

IMPORTANT SAFETY INSTRUCTIONS

FOR BATTERY CARTRIDGE

1. **Before using battery cartridge, read all instructions and cautionary markings on (1) battery charger, (2) battery, and (3) product using battery.**
2. **Do not disassemble battery cartridge.**
3. **If operating time has become excessively shorter, stop operating immediately. It may result in a risk of overheating, possible burns and even an explosion.**
4. **If electrolyte gets into your eyes, rinse them out with clear water and seek medical attention right away. It may result in loss of your eyesight.**
5. **Do not short the battery cartridge:**
   (1) **Do not touch the terminals with any conductive material.**
   (2) **Avoid storing battery cartridge in a container with other metal objects such as nails, coins, etc.**
   (3) **Do not expose battery cartridge to water or rain.**

   A battery short can cause a large current flow, overheating, possible burns and even a breakdown.
6. **Do not store the tool and battery cartridge in locations where the temperature may reach or exceed 50˚C (122˚F).**
7. **Do not incinerate the battery cartridge even if it is severely damaged or is completely worn out. The battery cartridge can explode in a fire.**
8. **Be careful not to drop or strike battery.**
9. **Do not use a damaged battery.**

SAVE THESE INSTRUCTIONS.

Tips for maintaining maximum battery life

1. **Charge the battery cartridge before completely discharged.**
   Always stop tool operation and charge the battery cartridge when you notice less tool power.
2. **Never recharge a fully charged battery cartridge.**
   Overcharging shortens the battery service life.
3. **Charge the battery cartridge with room temperature at 10˚C - 40˚C (50˚F - 104˚F). Let a hot battery cartridge cool down before charging it.**
4. **Charge the battery cartridge once in every six months if you do not use it for a long period of time.**

FUNCTIONAL DESCRIPTION

⚠CAUTION:

- Always be sure that the tool is switched off and the battery cartridge is removed before adjusting or checking function on the tool.

Installing or removing battery cartridge

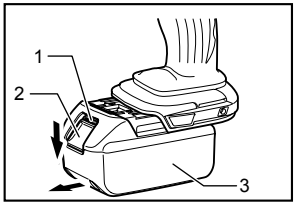

1. Red indicator
2. Button
3. Battery cartridge

012695

⚠CAUTION:

- Always switch off the tool before installing or removing of the battery cartridge.

To remove the battery cartridge, slide it from the tool while sliding the button on the front of the cartridge.
To install the battery cartridge, align the tongue on the battery cartridge with the groove in the housing and slip it into place. Insert it all the way until it locks in place with a little click. If you can see the red indicator on the upper side of the button, it is not locked completely.

⚠CAUTION:

- Always install the battery cartridge fully until the red indicator cannot be seen. If not, it may accidentally fall out of the tool, causing injury to you or someone around you.
- Do not use force when installing the battery cartridge. If the cartridge does not slide in easily, it is not being inserted correctly.

Battery protection system (Lithium-ion battery with star marking)

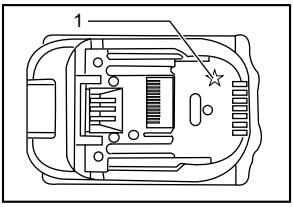

1. Star marking

012128

Lithium-ion batteries with a star marking are equipped with a protection system. This system automatically cuts off power to the tool to extend battery life.

The tool will automatically stop during operation if the tool and/or battery are placed under one of the following conditions:

- Overloaded:
  The tool is operated in a manner that causes it to draw an abnormally high current.
  In this situation, release the switch trigger on the tool and stop the application that caused the tool to become overloaded. Then pull the switch trigger again to restart.
  If the tool does not start, the battery is overheated. In this situation, let the battery cool before pulling the switch trigger again.
- Low battery voltage:
  The remaining battery capacity is too low and the tool will not operate. In this situation, remove and recharge the battery.

Switch action

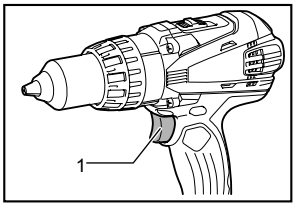

1. Switch trigger

012699

⚠CAUTION:

- Before inserting the battery cartridge into the tool, always check to see that the switch trigger actuates properly and returns to the "OFF" position when released.

To start the tool, simply pull the switch trigger. Tool speed is increased by increasing pressure on the switch trigger. Release the switch trigger to stop.

Lighting up the front lamp

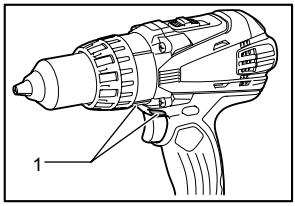

1. Lamp

012700

⚠CAUTION:

- Do not look in the light or see the source of light directly.

Pull the switch trigger to light up the lamp. The lamp keeps on lighting while the switch trigger is being pulled. The lamp goes out 10 -15 seconds after releasing the trigger.

NOTE:

- Use a dry cloth to wipe the dirt off the lens of lamp. Be careful not to scratch the lens of lamp, or it may lower the illumination.

Reversing switch action

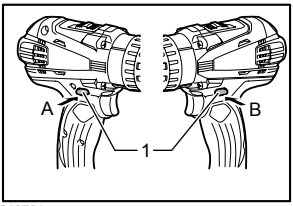

1. Reversing switch lever

012701

This tool has a reversing switch to change the direction of rotation. Depress the reversing switch lever from the A side for clockwise rotation or from the B side for counterclockwise rotation.
When the reversing switch lever is in the neutral position, the switch trigger cannot be pulled.

⚠CAUTION:

- Always check the direction of rotation before operation.
- Use the reversing switch only after the tool comes to a complete stop. Changing the direction of rotation before the tool stops may damage the tool.
- When not operating the tool, always set the reversing switch lever to the neutral position.

Speed change

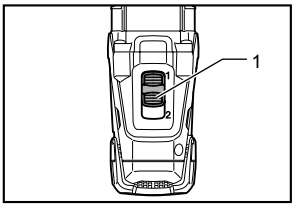

1. Speed change lever

012702

To change the speed, first switch off the tool and then slide the speed change lever to the "2" side for high speed or, "1" side for low speed. Be sure that the speed change lever is set to the correct position before operation. Use the right speed for your job.

⚠CAUTION:

- Always set the speed change lever fully to the correct position. If you operate the tool with the speed change lever positioned halfway between the "1" side and , "2" side, the tool may be damaged.
- Do not use the speed change lever while the tool is running. The tool may be damaged.

Selecting the action mode

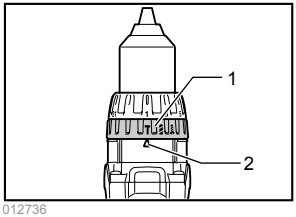

1. Action mode changing ring
2. Arrow

012736

This tool employs an action mode changing ring. Select one of the three modes suitable for your work needs by using this ring.
For rotation only, turn the ring so that the arrow on the tool body points toward the mark on the ring.
For rotation with hammering, turn the ring so that the arrow points toward the mark on the ring.
For rotation with clutch, turn the ring so that the arrow points toward the mark on the ring.

⚠CAUTION:

- Always set the ring correctly to your desired mode mark. If you operate the tool with the ring positioned halfway between the mode marks, the tool may be damaged.

Adjusting the fastening torque (screwdriver mode " ")

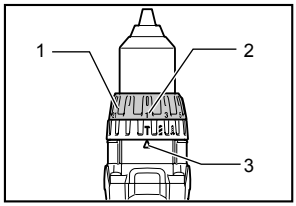

1. Adjusting ring
2. Graduation
3. Arrow

012735

The fastening torque can be adjusted in 21 steps by turning the adjusting ring so that its graduations are aligned with the pointer on the tool body.
First, slide the action mode change lever to the position of symbol.
The fastening torque is minimum when the number 1 is aligned with the pointer, and maximum when the marking is aligned with the pointer. The clutch will slip at various torque levels when set at the number 1 to 21. Before actual operation, drive a trial screw into your material or a piece of duplicate material to determine which torque level is required for a particular application.

NOTE:

- The adjusting ring does not lock when the pointer is positioned only halfway between the graduations.

Empty signal for remaining battery capacity

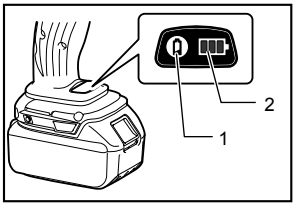

1. Button
2. LED indicator

012714

Stop the tool and with the tool stopped press the button on the switch panel and the remaining battery capacity will be signaled on the panel.
The status displayed on the switch panel and the remaining battery capacity is shown in the following table.

LED indicator status	Remaining battery capacity
	About 50% or more
	About 20% - 50%
	About less than 20%

012023

NOTE:

- Before checking the remaining battery capacity, be sure to stop the tool.

ASSEMBLY

⚠CAUTION:

- Always be sure that the tool is switched off and the battery cartridge is removed before carrying out any work on the tool.

Installing side grip (auxiliary handle)

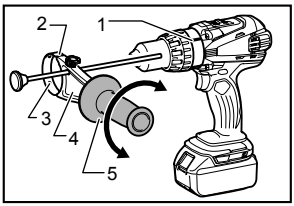

1. Groove
2. Protrusion
3. Steel band
4. Grip base
5. Side grip

012711

Always use the side grip to ensure operating safety.
Insert the side grip so that the protrusions on the grip base and steel band fit in between the grooves on the tool barrel. Then tighten the grip by turning clockwise.
When you turn the side grip, loosen and remove the grip, then turn the grip and insert it again.

Installing or removing driver bit or drill bit

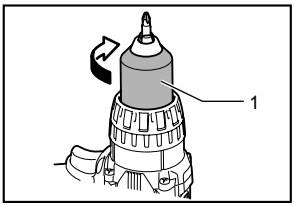

1. Sleeve

012697

Turn the sleeve counterclockwise to open the chuck jaws. Place the bit in the chuck as far as it will go. Turn the sleeve clockwise to tighten the chuck. To remove the bit, turn the sleeve counterclockwise.

Installing bit holder

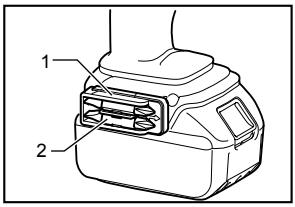

1. Bit holder
2. Bit

012708

Fit the bit holder into the protrusion at the tool foot on either right or left side and secure it with a screw.
When not using the driver bit, keep it in the bit holders. Bits 45 mm long can be kept there.

Adjustable depth rod

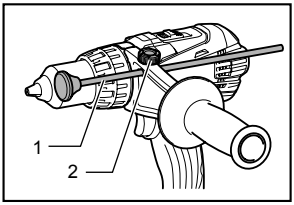

1. Depth rod
2. Clamp screw

012712

The adjustable depth rod is used to drill holes of uniform depth. Loosen the clamp screw, set to desired position, then tighten the clamp screw.

Hook

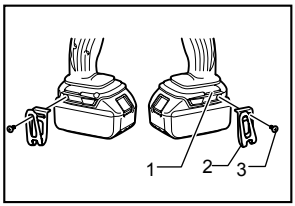

1. Groove
2. Hook
3. Screw

012698

The hook is convenient for temporarily hanging the tool. This can be installed on either side of the tool.
To install the hook, insert it into a groove in the tool housing on either side and then secure it with a screw. To remove, loosen the screw and then take it out.

OPERATION

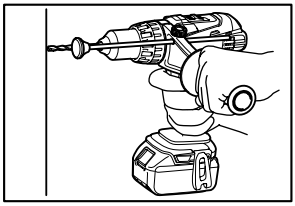

012737

Hammer drilling operation

⚠CAUTION:

- There is a tremendous and sudden twisting force exerted on the tool/bit at the time of hole break-through, when the hole becomes clogged with chips and particles, or when striking reinforcing rods embedded in the concrete. Always use the side grip (auxiliary handle) and firmly hold the tool by both side grip and switch handle during operations. Failure to do so may result in the loss of control of the tool and potentially severe injury.

First, slide the action mode change lever so that it points to the marking. The adjusting ring can be aligned in any torque levels for this operation.
Be sure to use a tungsten-carbide tipped bit.
Position the bit at the desired location for the hole, then pull the switch trigger. Do not force the tool. Light pressure gives best results. Keep the tool in position and prevent it from slipping away from the hole.
Do not apply more pressure when the hole becomes clogged with chips or particles. Instead, run the tool at an idle, then remove the bit partially from the hole. By repeating this several times, the hole will be cleaned out and normal drilling may be resumed.

Blow-out bulb (optional accessory)

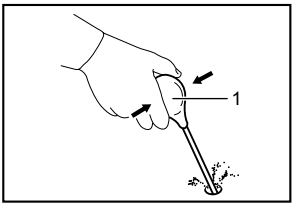

1. Blow-out bulb

002449

After drilling the hole, use the blow-out bulb to clean the dust out of the hole.

Screwdriving operation

First, slide the action mode change lever so that it points to the marking. Adjust the adjusting ring to the proper torque level for your work. Then proceed as follows.
Place the point of the driver bit in the screw head and apply pressure to the tool. Start the tool slowly and then increase the speed gradually. Release the switch trigger as soon as the clutch cuts in.

NOTE:

- Make sure that the driver bit is inserted straight in the screw head, or the screw and/or bit may be damaged.
- When driving wood screw, predrill a pilot hole 2/3 the diameter of the screw. It makes driving easier and prevents splitting of the workpiece.
- If the tool is operated continuously until the battery cartridge has discharged, allow the tool to rest for 15 minutes before proceeding with a fresh battery.

Drilling operation

⚠CAUTION:

- Pressing excessively on the tool will not speed up the drilling. In fact, this excessive pressure will only serve to damage the tip of your bit, decrease the tool performance and shorten the service life of the tool.

- There is a tremendous force exerted on the tool/bit at the time of hole break through. Hold the tool firmly and exert care when the bit begins to break through the workpiece.
- A stuck bit can be removed simply by setting the reversing switch to reverse rotation in order to back out. However, the tool may back out abruptly if you do not hold it firmly.
- Always secure small workpieces in a vise or similar hold-down device.
- If the tool is operated continuously until the battery cartridge has discharged, allow the tool to rest for 15 minutes before proceeding with a fresh battery.

First, slide the action mode change lever so that it points to the marking. The adjusting ring can be aligned in any torque levels for this operation. Then proceed as follows.

Drilling in wood

When drilling in wood, the best results are obtained with wood drills equipped with a guide screw. The guide screw makes drilling easier by pulling the bit into the workpiece.

Drilling in metal

To prevent the bit from slipping when starting a hole, make an indentation with a center-punch and hammer at the point to be drilled. Place the point of the bit in the indentation and start drilling.

Use a cutting lubricant when drilling metals. The exceptions are iron and brass which should be drilled dry.

MAINTENANCE

⚠**CAUTION:**

- Always be sure that the tool is switched off and the battery cartridge is removed before attempting to perform inspection or maintenance.
- Never use gasoline, benzine, thinner, alcohol or the like. Discoloration, deformation or cracks may result.

Replacing carbon brushes

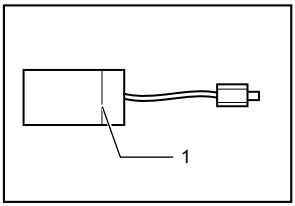

1. Limit mark

006258

Replace when they wear down to the limit mark. Keep the carbon brushes clean and free to slip in the holders. Both carbon brushes should be replaced at the same time. Use only identical carbon brushes.

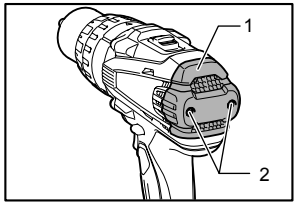

1. Rear cover
2. Screws

012705

Use a screwdriver to remove two screws then remove the rear cover.

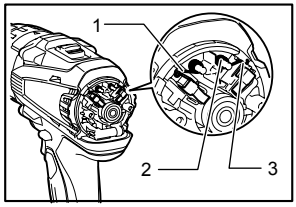

1. Arm
2. Spring
3. Recessed part

012706

Raise the arm part of the spring and then place it in the recessed part of the housing with a slotted bit screwdriver of slender shaft or the like.

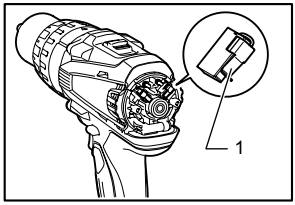

1. Carbon brush cap

012707

Use pliers to remove the carbon brush caps of the carbon brushes. Take out the worn carbon brushes, insert the new ones and replace the carbon brush caps in reverse.

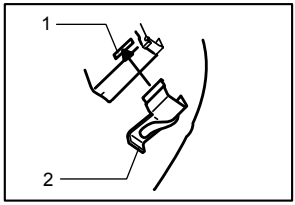

1. Hole
2. Carbon brush cap

006304

Make sure that the carbon brush caps have fit into the holes in brush holders securely.

Reinstall the rear cover and tighten two screws securely.

To maintain product SAFETY and RELIABILITY, repairs, any other maintenance or adjustment should be performed by Makita Authorized Service Centers, always using Makita replacement parts.

OPTIONAL ACCESSORIES

⚠CAUTION:

- These accessories or attachments are recommended for use with your Makita tool specified in this manual. The use of any other accessories or attachments might present a risk of injury to persons. Only use accessory or attachment for its stated purpose.

If you need any assistance for more details regarding these accessories, ask your local Makita Service Center.

- Drill bits
- Hammer drill bits
- Screw bits
- Blow-out bulb
- Safety goggles
- Makita genuine battery and charger
- Grip assembly
- Depth rod
- Hook
- Rubber pad assembly
- Wool bonnet
- Foam polishing pad
- Battery protector

NOTE:

- Some items in the list may be included in the tool package as standard accessories. They may differ from country to country.

Makita Jan-Baptist Vinkstraat 2, 3070, Belgium
Makita Corporation Anjo, Aichi, Japan

885234A220

www.makita.com

ENGLISH: Original instructions

INSTRUCTION MANUAL

Cordless Impact Driver

DTD152

Read before use.

SPECIFICATIONS

Model:		DTD152	
Fastening capacities	Machine screw	4 mm - 8 mm	
	Standard bolt	5 mm - 16 mm	
	High tensile bolt	5 mm - 12 mm	
No load speed		0 - 2,900 min^{-1}	
Impacts per minute		0 - 3,500 min^{-1}	
Overall length		137 mm	
Rated voltage		D.C. 18 V	
Battery cartridge		BL1815, BL1815N, BL1820, BL1820B	BL1830, BL1840, BL1850, BL1840B, BL1850B
Net weight		1.3 kg	1.5 kg

- Due to our continuing program of research and development, the specifications herein are subject to change without notice.
- Specifications and battery cartridge may differ from country to country.
- Weight, with battery cartridge, according to EPTA-Procedure 01/2003

Symbols

The following show the symbols used for the equipment. Be sure that you understand their meaning before use.

	Read instruction manual.
	Only for EU countries Do not dispose of electric equipment or battery pack together with household waste material! In observance of the European Directives, on Waste Electric and Electronic Equipment and Batteries and Accumulators and Waste Batteries and Accumulators and their implementation in accordance with national laws, electric equipment and batteries and battery pack(s) that have reached the end of their life must be collected separately and returned to an environmentally compatible recycling facility.

Intended use

The tool is intended for screw driving in wood, metal and plastic.

Noise

The typical A-weighted noise level determined according to EN60745:
Sound pressure level (L_{pA}) : 93 dB(A)
Sound power level (L_{WA}) : 104 dB (A)
Uncertainty (K) : 3 dB(A)

⚠WARNING: Wear ear protection.

Vibration

The vibration total value (tri-axial vector sum) determined according to EN60745:
Work mode: impact tightening of fasteners of the maximum capacity of the tool
Vibration emission (a_h) : 10.5 m/s^2
Uncertainty (K) : 1.5 m/s^2

NOTE: The declared vibration emission value has been measured in accordance with the standard test method and may be used for comparing one tool with another.

NOTE: The declared vibration emission value may also be used in a preliminary assessment of exposure.

⚠WARNING: The vibration emission during actual use of the power tool can differ from the declared emission value depending on the ways in which the tool is used.

⚠WARNING: Be sure to identify safety measures to protect the operator that are based on an estimation of exposure in the actual conditions of use (taking account of all parts of the operating cycle such as the times when the tool is switched off and when it is running idle in addition to the trigger time).

EC Declaration of Conformity

For European countries only

Makita declares that the following Machine(s):
Designation of Machine: Cordless Impact Driver
Model No./ Type: DTD152
Conforms to the following European Directives: 2006/42/EC
They are manufactured in accordance with the following standard or standardized documents: EN60745
The technical file in accordance with 2006/42/EC is available from:
Makita, Jan-Baptist Vinkstraat 2, 3070, Belgium
18.3.2015

Yasushi Fukaya
Director
Makita, Jan-Baptist Vinkstraat 2, 3070, Belgium

General power tool safety warnings

⚠**WARNING: Read all safety warnings and all instructions.** Failure to follow the warnings and instructions may result in electric shock, fire and/or serious injury.

Save all warnings and instructions for future reference.

The term "power tool" in the warnings refers to your mains-operated (corded) power tool or battery-operated (cordless) power tool.

Work area safety

1. **Keep work area clean and well lit.** Cluttered or dark areas invite accidents.
2. **Do not operate power tools in explosive atmospheres, such as in the presence of flammable liquids, gases or dust.** Power tools create sparks which may ignite the dust or fumes.
3. **Keep children and bystanders away while operating a power tool.** Distractions can cause you to lose control.

Electrical Safety

1. **Power tool plugs must match the outlet. Never modify the plug in any way. Do not use any adapter plugs with earthed (grounded) power tools.** Unmodified plugs and matching outlets will reduce risk of electric shock.
2. **Avoid body contact with earthed or grounded surfaces such as pipes, radiators, ranges and refrigerators.** There is an increased risk of electric shock if your body is earthed or grounded.
3. **Do not expose power tools to rain or wet conditions.** Water entering a power tool will increase the risk of electric shock.
4. **Do not abuse the cord. Never use the cord for carrying, pulling or unplugging the power tool. Keep cord away from heat, oil, sharp edges or moving parts.** Damaged or entangled cords increase the risk of electric shock.
5. **When operating a power tool outdoors, use an extension cord suitable for outdoor use.** Use of a cord suitable for outdoor use reduces the risk of electric shock.
6. **If operating a power tool in a damp location is unavoidable, use a residual current device (RCD) protected supply.** Use of an RCD reduces the risk of electric shock.

Personal Safety

1. **Stay alert, watch what you are doing and use common sense when operating a power tool. Do not use a power tool while you are tired or under the influence of drugs, alcohol or medication.** A moment of inattention while operating power tools may result in serious personal injury.
2. **Use personal protective equipment. Always wear eye protection.** Protective equipment such as dust mask, non-skid safety shoes, hard hat, or hearing protection used for appropriate conditions will reduce personal injuries.
3. **Prevent unintentional starting. Ensure the switch is in the off-position before connecting to power source and/or battery pack, picking up or carrying the tool.** Carrying power tools with your finger on the switch or energising power tools that have the switch on invites accidents.
4. **Remove any adjusting key or wrench before turning the power tool on.** A wrench or a key left attached to a rotating part of the power tool may result in personal injury.
5. **Do not overreach. Keep proper footing and balance at all times.** This enables better control of the power tool in unexpected situations.
6. **Dress properly. Do not wear loose clothing or jewellery. Keep your hair, clothing, and gloves away from moving parts.** Loose clothes, jewellery or long hair can be caught in moving parts.
7. **If devices are provided for the connection of dust extraction and collection facilities, ensure these are connected and properly used.** Use of dust collection can reduce dust-related hazards.

Power tool use and care

1. **Do not force the power tool. Use the correct power tool for your application.** The correct power tool will do the job better and safer at the rate for which it was designed.
2. **Do not use the power tool if the switch does not turn it on and off.** Any power tool that cannot be controlled with the switch is dangerous and must be repaired.
3. **Disconnect the plug from the power source and/or the battery pack from the power tool before making any adjustments, changing accessories, or storing power tools.** Such preventive safety measures reduce the risk of starting the power tool accidentally.
4. **Store idle power tools out of the reach of children and do not allow persons unfamiliar with the power tool or these instructions to operate the power tool.** Power tools are dangerous in the hands of untrained users.
5. **Maintain power tools. Check for misalignment or binding of moving parts, breakage of parts and any other condition that may affect the power tool's operation. If damaged, have the power tool repaired before use.** Many accidents are caused by poorly maintained power tools.
6. **Keep cutting tools sharp and clean.** Properly maintained cutting tools with sharp cutting edges are less likely to bind and are easier to control.
7. **Use the power tool, accessories and tool bits etc. in accordance with these instructions, taking into account the working conditions and the work to be performed.** Use of the power tool for operations different from those intended could result in a hazardous situation.

Battery tool use and care

1. **Recharge only with the charger specified by the manufacturer.** A charger that is suitable for one type of battery pack may create a risk of fire when used with another battery pack.
2. **Use power tools only with specifically designated battery packs.** Use of any other battery packs may create a risk of injury and fire.
3. **When battery pack is not in use, keep it away from other metal objects, like paper clips, coins, keys, nails, screws or other small metal objects, that can make a connection from one terminal to another.** Shorting the battery

terminals together may cause burns or a fire.

4. **Under abusive conditions, liquid may be ejected from the battery; avoid contact. If contact accidentally occurs, flush with water. If liquid contacts eyes, additionally seek medical help.** Liquid ejected from the battery may cause irritation or burns.

Service

1. **Have your power tool serviced by a qualified repair person using only identical replacement parts.** This will ensure that the safety of the power tool is maintained.
2. **Follow instruction for lubricating and changing accessories.**
3. **Keep handles dry, clean and free from oil and grease.**

Cordless impact driver safety warnings

1. **Hold power tool by insulated gripping surfaces, when performing an operation where the fastener may contact hidden wiring.** Fasteners contacting a "live" wire may make exposed metal parts of the power tool "live" and could give the operator an electric shock.
2. **Always be sure you have a firm footing. Be sure no one is below when using the tool in high locations.**
3. **Hold the tool firmly.**
4. **Wear ear protectors.**
5. **Do not touch the bit or the workpiece immediately after operation. They may be extremely hot and could burn your skin.**
6. **Keep hands away from rotating parts.**

SAVE THESE INSTRUCTIONS.

⚠WARNING: DO NOT let comfort or familiarity with product (gained from repeated use) replace strict adherence to safety rules for the subject product.

MISUSE or failure to follow the safety rules stated in this instruction manual may cause serious personal injury.

Important safety instructions for battery cartridge

1. **Before using battery cartridge, read all instructions and cautionary markings on (1) battery charger, (2) battery, and (3) product using battery.**
2. **Do not disassemble battery cartridge.**
3. **If operating time has become excessively shorter, stop operating immediately. It may result in a risk of overheating, possible burns and even an explosion.**
4. **If electrolyte gets into your eyes, rinse them out with clear water and seek medical attention right away. It may result in loss of your eyesight.**
5. **Do not short the battery cartridge:**
   (1) **Do not touch the terminals with any conductive material.**
   (2) **Avoid storing battery cartridge in a container with other metal objects such as nails, coins, etc.**
   (3) **Do not expose battery cartridge to water or rain.**

   A battery short can cause a large current flow, overheating, possible burns and even a breakdown.
6. **Do not store the tool and battery cartridge in locations where the temperature may reach or exceed 50 °C (122 °F).**
7. **Do not incinerate the battery cartridge even if it is severely damaged or is completely worn out. The battery cartridge can explode in a fire.**
8. **Be careful not to drop or strike battery.**
9. **Do not use a damaged battery.**
10. **Follow your local regulations relating to disposal of battery.**

SAVE THESE INSTRUCTIONS.

Tips for maintaining maximum battery life

1. **Charge the battery cartridge before completely discharged. Always stop tool operation and charge the battery cartridge when you notice less tool power.**
2. **Never recharge a fully charged battery cartridge. Overcharging shortens the battery service life.**
3. **Charge the battery cartridge with room temperature at 10 °C - 40 °C (50 °F - 104 °F). Let a hot battery cartridge cool down before charging it.**
4. **Charge the battery cartridge if you do not use it for a long period (more than six months).**

FUNCTIONAL DESCRIPTION

⚠CAUTION: Always be sure that the tool is switched off and the battery cartridge is removed before adjusting or checking function on the tool.

Installing or removing battery cartridge

⚠CAUTION: Always switch off the tool before installing or removing of the battery cartridge.

⚠CAUTION: Hold the tool and the battery cartridge firmly when installing or removing battery cartridge. Failure to hold the tool and the battery cartridge firmly may cause them to slip off your hands and result in damage to the tool and battery cartridge and a personal injury.

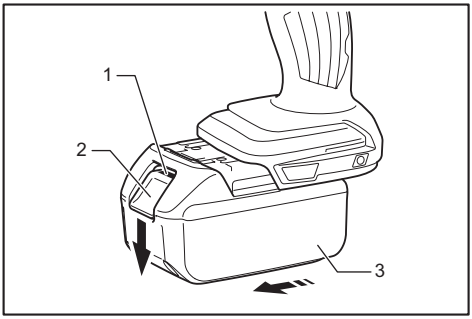

1. Red indicator 2. Button 3. Battery cartridge

To remove the battery cartridge, slide it from the tool while sliding the button on the front of the cartridge.
To install the battery cartridge, align the tongue on the battery cartridge with the groove in the housing and slip it into place. Insert it all the way until it locks in place with a little click. If you can see the red indicator on the upper side of the button, it is not locked completely.

⚠CAUTION: Always install the battery cartridge fully until the red indicator cannot be seen. If not, it may accidentally fall out of the tool, causing injury to you or someone around you.

⚠CAUTION: Do not install the battery cartridge forcibly. If the cartridge does not slide in easily, it is not being inserted correctly.

Battery protection system

Lithium-ion battery with star marking

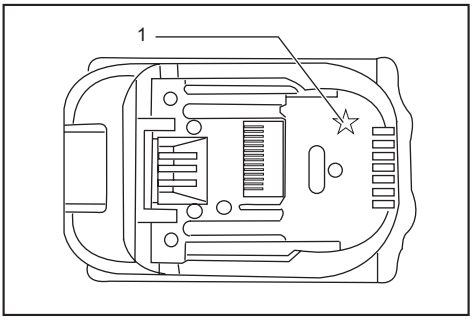

1. Star marking

Lithium-ion batteries with a star marking are equipped with a protection system. This system automatically cuts off power to the tool to extend battery life.
The tool will automatically stop during operation if the tool and/or battery are placed under one of the following conditions:

Overloaded:
The tool is operated in a manner that causes it to draw an abnormally high current.
In this situation, release the switch trigger on the tool and stop the application that caused the tool to become overloaded. Then pull the switch trigger again to restart.
If the tool does not start, the battery is overheated.
In this situation, let the battery cool before pulling the switch trigger again.

Low battery voltage:
The remaining battery capacity is too low and the tool will not operate. In this situation, remove and recharge the battery.

Indicating the remaining battery capacity

Only for battery cartridges with "B" at the end of the model number

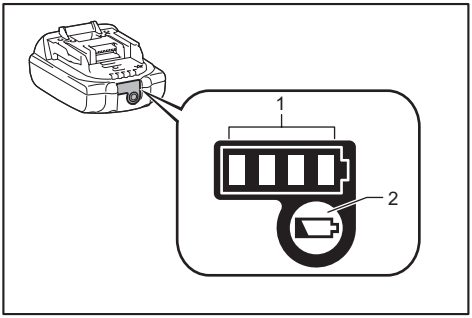

1. Indicator lamps 2. Check button

Press the check button on the battery cartridge to indicate the remaining battery capacity. The indicator lamps light up for few seconds.

Indicator lamps			Remaining capacity
■ Lighted	□ Off	◪ Blinking	
■ ■ ■ ■			75% to 100%
■ ■ ■ □			50% to 75%
■ ■ □ □			25% to 50%
■ □ □ □			0% to 25%
◪ □ □ □			Charge the battery.
■ ■ □ □ ↑ ↓ □ □ ■ ■			The battery may have malfunctioned.

NOTE: Depending on the conditions of use and the ambient temperature, the indication may differ slightly from the actual capacity.

Switch action

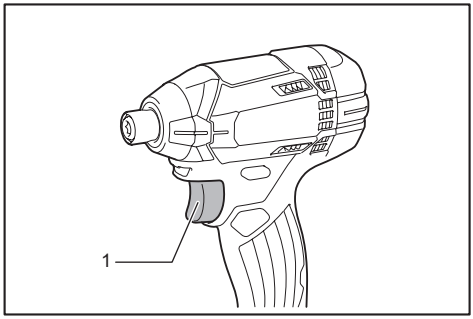

1. Switch trigger

⚠CAUTION: Before inserting the battery cartridge into the tool, always check to see that the switch trigger actuates properly and returns to the "OFF" position when released.

To start the tool, simply pull the switch trigger. Tool speed is increased by increasing pressure on the switch trigger. Release the switch trigger to stop.

Lighting up the front lamp

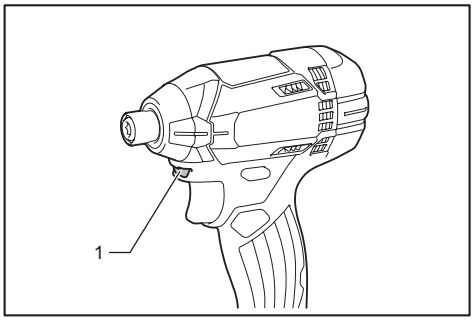

1. Lamp

⚠CAUTION: Do not look in the light or see the source of light directly.

Pull the switch trigger to light up the lamp. The lamp keeps on lighting while the switch trigger is being pulled. The lamp goes out 10 -15 seconds after releasing the trigger.

NOTE: Use a dry cloth to wipe the dirt off the lens of the lamp. Be careful not to scratch the lens of lamp, or it may lower the illumination.

Reversing switch action

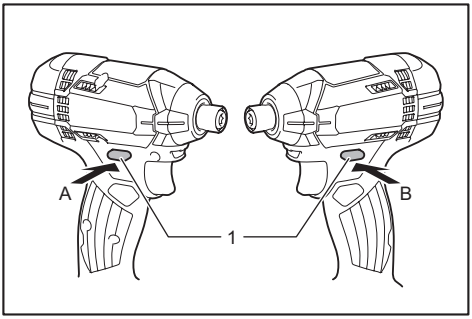

1. Reversing switch lever

⚠CAUTION: Always check the direction of rotation before operation.

⚠CAUTION: Use the reversing switch only after the tool comes to a complete stop. Changing the direction of rotation before the tool stops may damage the tool.

⚠CAUTION: When not operating the tool, always set the reversing switch lever to the neutral position.

This tool has a reversing switch to change the direction of rotation. Depress the reversing switch lever from the A side for clockwise rotation or from the B side for counterclockwise rotation.
When the reversing switch lever is in the neutral position, the switch trigger cannot be pulled.

ASSEMBLY

⚠CAUTION: Always be sure that the tool is switched off and the battery cartridge is removed before carrying out any work on the tool.

Installing or removing driver bit/ socket bit

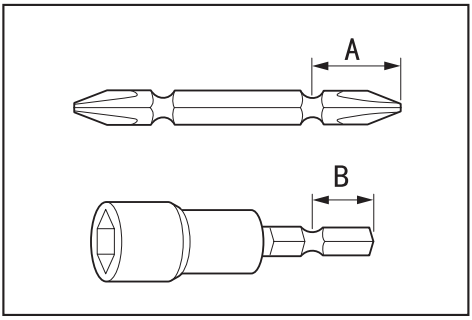

Use only driver bit/socket bit that has inserting portion shown in the figure. Do not use any other driver bit/ socket bit.

For tool with shallow driver bit hole

A=12mm B=9mm	Use only these type of driver bit. Follow the procedure 1. (Note) Bit-piece is not necessary.

For tool with deep driver bit hole

A=17mm B=14mm	To install these types of driver bits, follow the procedure 1.
A=12mm B=9mm	To install these types of driver bits, follow the procedure 2. (Note) Bit-piece is necessary for installing the bit.

Procedure 1

For tool without one-touch type sleeve

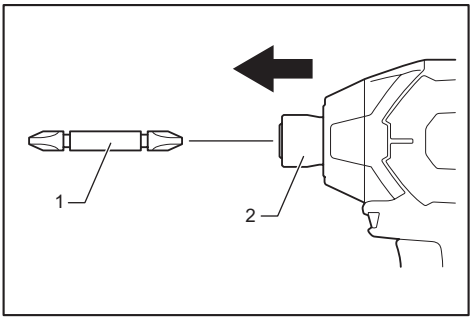

1. Driver bit 2. Sleeve

To install the driver bit, pull the sleeve in the direction of the arrow and insert the driver bit into the sleeve as far as it will go.
Then release the sleeve to secure the driver bit.
For tool with one-touch type sleeve
To install the driver bit, insert the driver bit into the sleeve as far as it will go.

Procedure 2

In addition to **Procedure 1**, insert the bit-piece into the sleeve with its pointed end facing in.

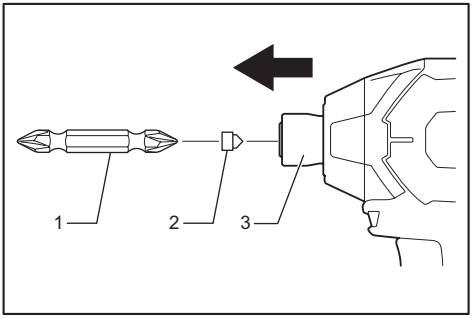

1. Driver bit 2. Bit-piece 3. Sleeve

To remove the driver bit, pull the sleeve in the direction of the arrow and pull the driver bit out.

NOTE: If the driver bit is not inserted deep enough into the sleeve, the sleeve will not return to its original position and the driver bit will not be secured. In this case, try re-inserting the bit according to the instructions above.

NOTE: When it is difficult to insert the driver bit, pull the sleeve and insert it into the sleeve as far as it will go.

NOTE: After inserting the driver bit, make sure that it is firmly secured. If it comes out, do not use it.

Installing hook

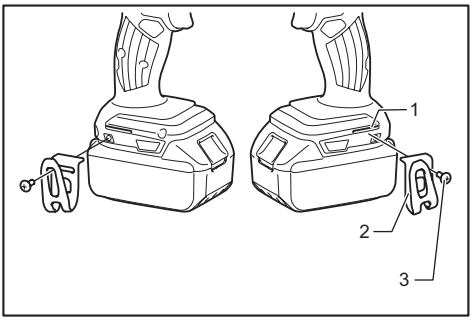

1. Groove 2. Hook 3. Screw

The hook is convenient for temporarily hanging the tool. This can be installed on either side of the tool. To install the hook, insert it into a groove in the tool housing on either side and then secure it with a screw. To remove, loosen the screw and then take it out.

OPERATION

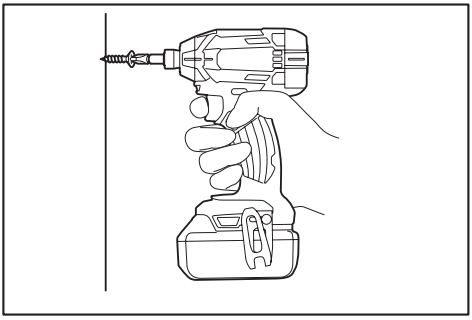

The proper fastening torque may differ depending upon the kind or size of the screw/bolt, the material of the workpiece to be fastened, etc. The relation between fastening torque and fastening time is shown in the figures.

Proper fastening torque for standard bolt

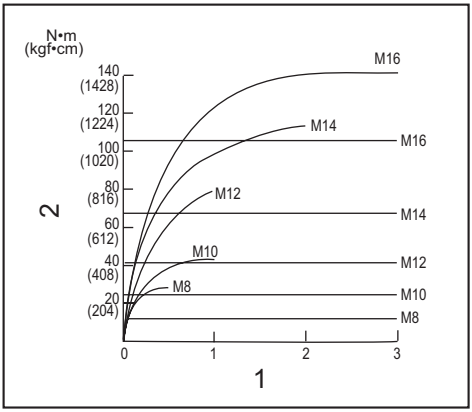

1. Fastening time (second) 2. Fastening torque

Proper fastening torque for high tensile bolt

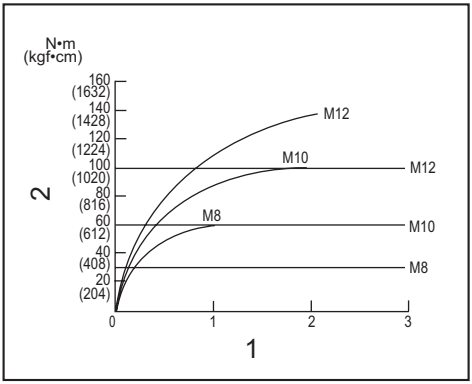

1. Fastening time (second) 2. Fastening torque

Hold the tool firmly and place the point of the driver bit in the screw head. Apply forward pressure to the tool to the extent that the bit will not slip off the screw and turn the tool on to start operation.

NOTICE: If you use a spare battery to continue the operation, rest the tool at least 15 min.

NOTE: Use the proper bit for the head of the screw/bolt that you wish to use.

NOTE: When fastening M8 or smaller screw, choose a proper impact force and carefully adjust pressure on the switch trigger so that the screw is not damaged.

NOTE: Hold the tool pointed straight at the screw.

NOTE: If the impact force is too strong or you tighten the screw for a time longer than shown in the figures, the screw or the point of the driver bit may be over-stressed, stripped, damaged, etc. Before starting your job, always perform a test operation to determine the proper fastening time for your screw.

The fastening torque is affected by a wide variety of factors including the following. After fastening, always check the torque with a torque wrench.

1. When the battery cartridge is discharged almost completely, voltage will drop and the fastening torque will be reduced.
2. Driver bit or socket bit
   Failure to use the correct size driver bit or socket bit will cause a reduction in the fastening torque.
3. Bolt
   - Even though the torque coefficient and the class of bolt are the same, the proper fastening torque will differ according to the diameter of bolt.
   - Even though the diameters of bolts are the same, the proper fastening torque will differ according to the torque coefficient, the class of bolt and the bolt length.
4. The manner of holding the tool or the material of driving position to be fastened will affect the torque.
5. Operating the tool at low speed will cause a reduction in the fastening torque.

MAINTENANCE

⚠CAUTION: Always be sure that the tool is switched off and the battery cartridge is removed before attempting to perform inspection or maintenance.

NOTICE: Never use gasoline, benzine, thinner, alcohol or the like. Discoloration, deformation or cracks may result.

Replacing carbon brushes

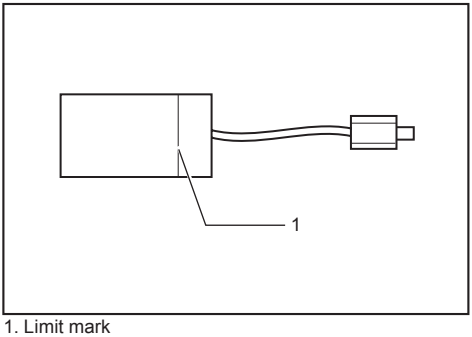

1. Limit mark

Check the carbon brushes regularly.
Replace them when they wear down to the limit mark.
Keep the carbon brushes clean and free to slip in the holders. All carbon brushes should be replaced at the same time. Use only identical carbon brushes.

1. Use a screwdriver to remove two screws then remove the rear cover.

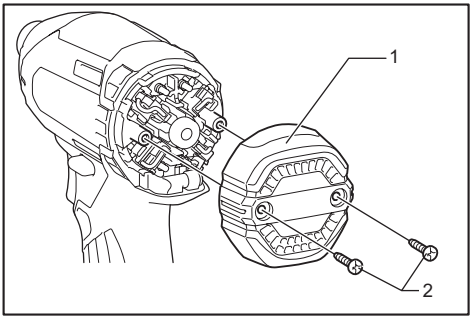

1. Rear cover 2. Screw

2. Raise the arm part of the spring and then place it in the recessed part of the housing with a slotted bit screwdriver of slender shaft or the like.

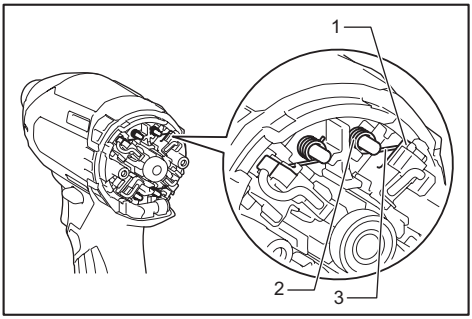

1. Recessed part 2. Spring 3. Arm

3. Use pliers to remove the carbon brush caps of the carbon brushes. Take out the worn carbon brushes, insert the new ones and replace the carbon brush caps in reverse.

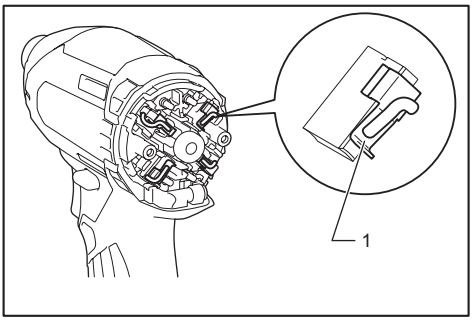

1. Carbon brush cap

4. Make sure to place the lead wire in opposite side of the arm.

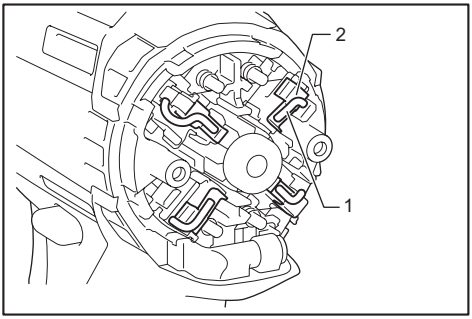

1. Lead wire 2. Carbon brush cap

5. Make sure that the carbon brush caps have fit into the holes in brush holders securely.

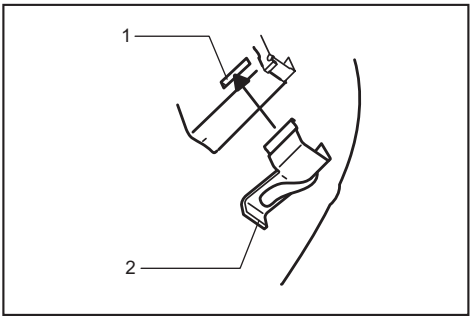

1. Hole 2. Carbon brush cap

6. Reinstall the rear cover and tighten two screws securely.

7. Insert the battery cartridge into the tool and break in brushes by running tool with no load for about 1 minute.

8. Check the tool while running and electric brake operation when releasing the switch trigger. If electric brake is not working well, ask Makita Authorized or Factory Service Centers for repair.
To maintain product SAFETY and RELIABILITY, repairs, any other maintenance or adjustment should be performed by Makita Authorized or Factory Service Centers, always using Makita replacement parts.

OPTIONAL ACCESSORIES

⚠**CAUTION: These accessories or attachments are recommended for use with your Makita tool specified in this manual.** The use of any other accessories or attachments might present a risk of injury to persons. Only use accessory or attachment for its stated purpose.

If you need any assistance for more details regarding these accessories, ask your local Makita Service

Center.

- Driver bits
- Hook
- Plastic carrying case
- Makita genuine battery and charger
- Battery protector

NOTE: Some items in the list may be included in the tool package as standard accessories. They may differ from country to country.

Makita Jan-Baptist Vinkstraat 2, 3070, Belgium
Makita Corporation Anjo, Aichi, Japan

885432-226

EN
20150522

www.makita.com